This is a digital copy of a book that was preserved for generations on library shelves before it was carefully scanned by Google as part of a project to make the world's books discoverable online.

It has survived long enough for the copyright to expire and the book to enter the public domain. A public domain book is one that was never subject to copyright or whose legal copyright term has expired. Whether a book is in the public domain may vary country to country. Public domain books are our gateways to the past, representing a wealth of history, culture and knowledge that's often difficult to discover.

Marks, notations and other marginalia present in the original volume will appear in this file - a reminder of this book's long journey from the publisher to a library and finally to you.

Usage guidelines

Google is proud to partner with libraries to digitize public domain materials and make them widely accessible. Public domain books belong to the public and we are merely their custodians. Nevertheless, this work is expensive, so in order to keep providing this resource, we have taken steps to prevent abuse by commercial parties, including placing technical restrictions on automated querying.

We also ask that you:

+ *Make non-commercial use of the files* We designed Google Book Search for use by individuals, and we request that you use these files for personal, non-commercial purposes.
+ *Refrain from automated querying* Do not send automated queries of any sort to Google's system: If you are conducting research on machine translation, optical character recognition or other areas where access to a large amount of text is helpful, please contact us. We encourage the use of public domain materials for these purposes and may be able to help.
+ *Maintain attribution* The Google "watermark" you see on each file is essential for informing people about this project and helping them find additional materials through Google Book Search. Please do not remove it.
+ *Keep it legal* Whatever your use, remember that you are responsible for ensuring that what you are doing is legal. Do not assume that just because we believe a book is in the public domain for users in the United States, that the work is also in the public domain for users in other countries. Whether a book is still in copyright varies from country to country, and we can't offer guidance on whether any specific use of any specific book is allowed. Please do not assume that a book's appearance in Google Book Search means it can be used in any manner anywhere in the world. Copyright infringement liability can be quite severe.

About Google Book Search

Google's mission is to organize the world's information and to make it universally accessible and useful. Google Book Search helps readers discover the world's books while helping authors and publishers reach new audiences. You can search through the full text of this book on the web at `http://books.google.com/`

TEXT-BOOK

ON

PRACTICAL SOLID OR DESCRIPTIVE

GEOMETRY

D. A. LOW.

PART II.

Math 5708.87

SCIENCE CENTER LIBRARY

GIFT OF

LONGMANS, GREEN & CO.,

PUBLISHERS,

LONDON AND NEW YORK.

Received 23 March, 1889.

PRACTICAL SOLID OR DESCRIPTIVE

GEOMETRY

The following are the Contents of Part I. (price 2s.)

CHAPTER I.
Introduction.

CHAPTER II.
Projection of Points and Lines.

CHAPTER III.
Simple Solids in Simple Positions.

CHAPTER IV.
Changing the Planes of Projection.

CHAPTER V.
Additional Problems on Lines.

CHAPTER VI.
Planes other than the Co-ordinate Planes.

CHAPTER VII.
Problems on the Straight Line and Plane.

CHAPTER VIII.
Sections of Solids.

CHAPTER IX.
Projection of Plane Figures.

APPENDIX.

TEXT-BOOK

ON

PRACTICAL SOLID OR DESCRIPTIVE

GEOMETRY

BY

DAVID ALLAN LOW

(WHITWORTH SCHOLAR)

LECTURER ON ENGINEERING IN ALLAN GLEN'S INSTITUTION, GLASGOW

IN TWO PARTS—PART II.

SECOND EDITION

LONDON

LONGMANS, GREEN, AND CO.

AND NEW YORK : 15 EAST 16th STREET

1887

All rights reserved

~~VI 4362~~
Math 5708.87
HARVARD COLLEGE
MAR 23 1889
LIBRARY.

Publishers

PRINTED BY
SPOTTISWOODE AND CO., NEW-STREET SQUARE
LONDON

PREFACE.

THE AUTHOR, in writing this text-book, has endeavoured to meet the wants of both elementary and advanced students, and he believes that it will be found to contain all the descriptive geometry which is usually required by engineering and architectural draughtsmen. But while making the book comprehensive, and illustrating it fully, it has not been made of an inconvenient size for use in large classes.

The treatment of the subject in this work is slightly different from that in any existing books. The problems are stated in a more comprehensive way, and are made to include more cases than is usual with other writers. After the statement of the problem follows the general solution, which is usually given without reference to any particular example. Next comes the application of the problem to one or more examples. In many cases the student may not fully understand the general solution of a problem until he has worked out the examples which illustrate it. The advantage of this mode of treatment is, that it is more systematic, and enables the student to get a more intelligent and comprehensive grasp of the subject. After working the examples and mastering the general solution of a problem, the student is better able to cope with any fresh examples which may come before him, than if he had learned the subject from examples only.

The elementary portion of the subject is treated of in Part I., and the more advanced portion in Part II.

A great want which the author has found in existing works on descriptive geometry is that of a sufficient number of good exercises properly graduated; he has, therefore, been at considerable trouble to collect and devise a large number of exercises, and he believes that in no other work of the kind will there be found such a good collection. In this matter he would record his indebtedness to the examination papers published by the Science and Art Department, which has done so much to promote the teaching of this and other science subjects throughout the country.

In conclusion, the author would like to impress upon the student the necessity of working out all the examples and exercises on paper with the drawing instruments, neatly and of full size. It is not enough for the student to know how a problem is to be solved, he must actually work it out; as very often from the peculiar position of the points, lines, or planes, the result is quite different from what he would have expected.

D. A. L.

GLASGOW: *November* 1883.

CONTENTS.

PART II.

CHAPTER X.

PAGE

ADDITIONAL PROBLEMS ON THE STRAIGHT LINE AND PLANE . 1

CHAPTER XI.

PROJECTION OF SOLIDS 15

CHAPTER XII.

ISOMETRIC PROJECTION 22

CHAPTER XIII.

HORIZONTAL PROJECTION 34

CHAPTER XIV.

CURVED SURFACES AND TANGENT PLANES 45

CHAPTER XV.

DEVELOPMENTS AND THE PROJECTION OF SCREW THREADS . 64

CHAPTER XVI.

PAGE
INTERSECTION OF SURFACES 71

CHAPTER XVII.

PROJECTION OF SHADOWS 96

CHAPTER XVIII.

MISCELLANEOUS PROBLEMS 104

CHAPTER XIX.

THEORY OF PERSPECTIVE 115

APPENDIX 127

PRACTICAL SOLID

OR

DESCRIPTIVE GEOMETRY.

PART II.

CHAPTER X.

ADDITIONAL PROBLEMS ON THE STRAIGHT LINE AND PLANE.

PROBLEM 76.

To find the angle between a given line and a given plane.

Determine by Problem 55 the projections of a line which will pass through any point, $p\,p'$, in the given line, and be perpendicular to the given plane. Find the angle between these two intersecting lines by Problem 29. The complement of this angle is the angle required.

For let the given line meet the given plane at the point $q\,q'$, and let the perpendicular from $p\,p'$ to the plane meet the latter at the point $r\,r'$. Since P R is perpendicular to the plane, the angle P R Q will be a right angle and Q R will be the projection of P Q on the plane. But the inclination of a line to a plane is the angle between the line and its projection on the plane. Therefore the angle P Q R is the angle between the given line and plane, and the angle P R Q is a right angle; therefore the angle P Q R is the complement of the angle Q P R.

PROBLEM 77.

To find the angle between two given intersecting planes.

First method. Determine by Problem 55 the projections of two intersecting lines perpendicular to the given planes, one to each. Find by Problem 29 the angle between these two perpendiculars. The supplement of this angle is the angle between the planes.

Second method. Let L′M N, L′R N, be the given planes. Find lN, the plan of their intersection. Draw A C B at right angles to lN. With centre l and radii lC and lN describe the arcs C C_2 and N N_2. Join L′N_2 and draw C_2 P_2 perpendicular to L′N_2. Make C P_1 equal to C_2 P_2. Join P_1 A and P_1 B. The angle A P_1 B is the angle between the planes L′M N and L′R N.

FIG. 114*a*.

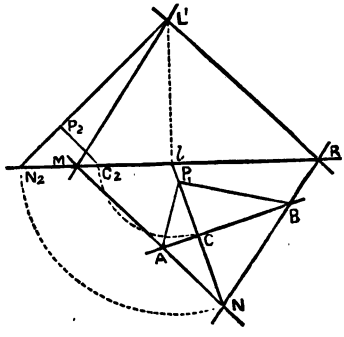

The theory of this construction is as follows. A B is the horizontal trace of a plane which is perpendicular to the line of intersection of the given planes. This plane intersects the given planes in two lines, A P and B P, the angle between which measures the angle between the planes. The lines A P, B P, together with A B, form a triangle of which A P_1 B is the true form.

In fig. 114*a* the points A and B, where the line perpendicular to lN meets the horizontal traces of the given planes, are on opposite sides of lN, but these points may be on the same side of that line, in which case the angle between the planes is the supplement of the angle A P_1 B. In particular cases A B may be parallel to either M N or R N; in these cases the point A or the point B will be at an infinite distance from C.

PROBLEM 78.

To draw the traces of a plane which shall make a given angle with a given plane and contain a given line in it.

Let L′M N, fig. 114*a*, be the given plane, and l N the plan of the line in it which the other plane is to contain.

Draw A C perpendicular to l N, meeting the latter at C, and the horizontal trace of the given plane at A. With centre l and radii l C and l N describe the arcs C C_2 and N N_2. Join L′N_2 and draw C_2 P_2 perpendicular to L′N_2. Make C P_1 equal to C_2 P_2. Join P_1 A, and make the angle A P_1 B equal to the given angle. Join N B, and produce it to meet X Y at R. Join L′R. L′R and R N are the traces of the plane required.

The theory of this construction is similar to that of the preceding problem, and requires no further explanation.

FIG. 115.

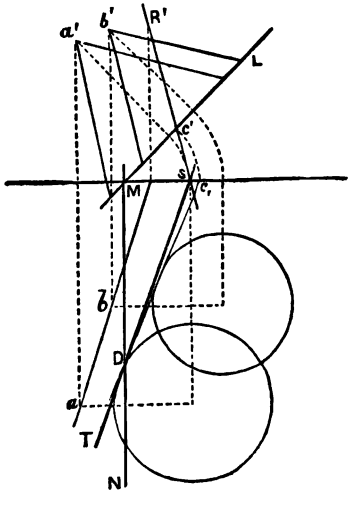

PROBLEM 79.

To draw the traces of a plane which shall make a given angle with a given plane, and contain a given line not contained by the given plane.

Let L′M N be the given plane and A B the given line. Take any two points, A B, in this line, and consider them to be the vertices of two cones whose bases are in the given plane, and whose slant sides are inclined to their bases at the given angle.

It is evident that a plane which touches these two cones

will fulfil the conditions of the required plane. Also a plane which touches these two cones will intersect the given plane in a line which will be a tangent to the bases of the cones.

Rebate the given plane with the circles which are the bases of the cones into the horizontal plane. Draw a tangent, C_1 D, to these circles when in this position. Now rebate the plane with the tangent upon it back to its former position. The plane R′S T, containing the lines A B and C D, is the plane required.

PROBLEM 80.

To draw the traces of a plane which shall contain a given point, have a given inclination, and make a given angle with a given plane.

Conceive a cone having its vertex at the given point, its base in the horizontal plane, and its slant side inclined to its base at the angle which the required plane is to make with the horizontal plane. Conceive also a second cone having its vertex at the given point, its base in the given plane, and its slant side inclined to its base at the angle which the required plane is to make with the given plane.

It is evident that any plane which touches the first cone will have an inclination to the horizontal plane equal to that which the required plane is to have. Also that any plane which touches the second cone will make an angle with the given plane equal to that which the required plane is to make with it.

Hence a plane which touches both of these cones will fulfil the conditions of the required plane.

In fig. 116, vv' is the given point and L′MN the given plane, which is assumed to be perpendicular to the vertical plane of projection. $v'\,a'\,b'$ is the elevation of the first cone and $v'\,c'\,d'$ the elevation of the second cone.

Imagine the surface of the second cone to be produced until it cuts the horizontal plane. The curve of section (called the horizontal trace of the cone) will be a 'conic section,' and may be found by Problem 69, Chapter VIII.

The following construction, which is that mentioned on p. 96, Part I., slightly modified, is suitable for finding the horizontal trace of this second cone. Draw R′S perpendicular to $v'\,w'$, the elevation of the axis of the cone, and meeting X Y at S, $v'\,w'$ at z' and $v'\,d'$ at f'. With z' as centre and $z'\,f'$ as radius describe a circle, and through S draw S H_2 perpendicular to R′S to meet this circle at H_2. Draw S T perpendicular to X Y to meet the plan of the axis of the cone at T.

FIG. 116.

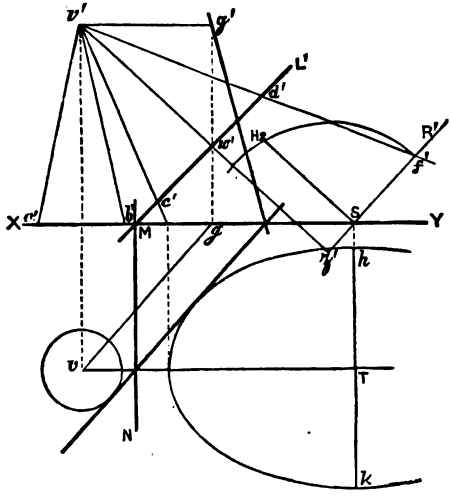

Make T h and T k each equal to S H_2; h and k will be points on the horizontal trace of the cone. In like manner any number of points on the curve may be found.

The cone whose axis is vertical will have for its horizontal trace its base, which is a circle with a diameter equal to $a'\,b'$.

The horizontal traces of all planes which touch the two cones will be tangents to the horizontal traces of these cones.

If the circle which is the horizontal trace of the first cone fall entirely outside the curve which is the trace of the other, four tangents can be drawn to the two traces, and four planes

can be found which will fulfil the given conditions. But if the horizontal traces of the cones cut one another, only two tangents can be drawn to them, and in that case only two planes can be found to fulfil the given conditions. Again, if the horizontal trace of one cone touches the horizontal trace of the other internally, only one tangent can be drawn to them, and in this case there would only be one plane which would fulfil the given conditions. Lastly, if the trace of one cone falls entirely within the trace of the other without touching it the problem is impossible.

To find the vertical trace of the plane draw $v\,g$ parallel to the horizontal trace, meeting X Y at g. Draw $g\,g'$ perpendicular to X Y, and through v' draw $v'g'$ parallel to X Y, meeting this perpendicular at g'. The line joining g' with the point where the horizontal trace of the plane cuts X Y is the required vertical trace.

If the horizontal trace of the plane does not meet the ground line within a convenient distance the vertical trace may be found as shown in fig. 89.

Note. If the second plane is perpendicular to the first, the second cone will become a line perpendicular to the first plane, and the horizontal trace of the required plane will pass through the horizontal trace of this line and touch the base of the first cone.

PROBLEM 81.

To draw the projections of a line which shall pass through a given point, and meet a given line at a given angle.

Determine the traces of the plane containing the given point (P) and given line (A B). Rebate this plane with the point and line upon it into the horizontal plane, as in Chapter IX. Let P_1 be the rebated position of the point P, and $A_1\,B_1$ the rebated position of the line A B. Through P_1 draw a line making with $A_1\,B_1$ an angle equal to the given angle. Let this line meet the horizontal trace of the plane at C. A line joining C with p, the plan of the given point, is the

plan of the line required, and if C c' be drawn perpendicular to X Y to meet the latter at c', c' p' will be the elevation required.

If the line P_1 C does not meet the horizontal trace of the plane containing the point P and the line A B within a convenient distance, through the point D_1 where P_1 C meets A_1 B_1, draw a line perpendicular to the horizontal trace of the plane to meet a b at d. Draw d d' perpendicular to X Y to meet a' b' at d'; p d, p' d' are the projections of the line required.

If the given angle be an angle of 0°, 90° or 180°, only one line can fulfil the given conditions, but for any other angle there will be two lines.

PROBLEM 82.

To find the traces of a plane which shall contain a given line (A B) *and make a given angle with another line* (C D).

Determine the projections of a line, E F, which shall be parallel to C D and meet A B at any point, E, in it.

Take E as the vertex and E F as the axis of a cone, whose slant side is inclined to its axis at an angle equal to the given angle. Find, as in Problem 80, the horizontal trace of this cone. A tangent from the horizontal trace of A B to the horizontal trace of the cone will be the horizontal trace of the plane required. Having got the horizontal trace of the plane, its vertical trace can easily be found, since the plane is to contain the line A B.

If the horizontal trace of A B fall outside the curve which is the horizontal trace of the cone, there will be two solutions of the problem; if it fall on the curve there will be one solution only, and if it fall inside the curve there can be no solution.

PROBLEM 83.

To draw the traces of two planes which shall be perpendicular to one another and have given inclinations.

Draw the horizontal trace of one plane at any angle to X Y (preferably a right angle), and determine the vertical

trace by Problem 34. Take any point, P, in this plane (preferably in its vertical trace), and determine by Problem 55 a line to pass through it and be perpendicular to the plane. Find Q, the horizontal trace of this line. Determine also a cone having its vertex at P, its base in the horizontal plane, and its slant side inclined at the angle which the second plane is to make with the horizontal plane. A line through Q to touch the base of the cone will be the horizontal trace of the second plane. The vertical trace of this plane is easily found from the condition that the plane is to contain the line P Q.

PROBLEM 84.

To draw the traces of three planes which are each perpendicular to the other two, having given the inclinations of two of the planes.

Determine by the preceding problem the traces of the two planes whose inclinations are given. Next determine the line of intersection of these two planes. The third plane will be perpendicular to this line; its traces may therefore be determined by Problem 56.

PROBLEM 85.

Given the plan of three intersecting lines which are each perpendicular to the other two, to determine an elevation of them.

Let *o a*, *o b*, *o c* be the plans of three lines which are mutually perpendicular.

It is evident that each line will be perpendicular to the plane containing the other two, and therefore that the plan of each will be perpendicular to the horizontal trace of the plane of the other two. Also the horizontal traces of the planes containing each pair of lines will pass through the horizontal traces of these lines.

It is clear that the form of any elevation of the lines will not be affected by the position of the horizontal plane of pro-

jection, so that we may take it at any level. Hence we may take any line, ab, perpendicular to co as the horizontal trace of the plane containing the lines A O and B O. Then a perpendicular from b to ao to meet co at c will be the horizontal trace of the plane containing B O and C O; and ac will be the horizontal trace of the plane of A O and C O.

FIG. 117.

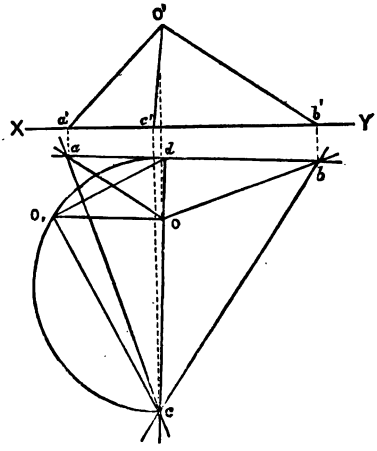

Produce co to meet ab at d, and consider od as the plan of a line lying in the plane A O B. Since C O is perpendicular to the plane A O B, the angle C O D will be a right angle.

Conceive the triangle C O D to revolve about C D until it comes into the horizontal plane. The point O will describe an arc of a circle whose plan will be a line perpendicular to cd, and the point O will, when brought into the horizontal plane, occupy such a position on this line that lines drawn from it to C and D will be at right angles to one another.

Hence on cd describe a semicircle to cut the line oO_1 perpendicular to cd at O_1. oO_1 will be the distance of the point O from the horizontal plane containing the points A, B, and C. Having got this distance, any elevation whatever of the lines can be drawn. In the figure an elevation is shown on a ground line, X Y.

PROBLEM 86.

To determine the projections of two lines which shall pass through two given points, meet on a given plane, make equal angles with that plane, and lie in a plane perpendicular to it.

Or, to find a point on a given plane such that the sum of its distances from two given points shall be the least possible.

Let P and Q be the given points and L/M N the given plane. Determine the projections of a line to pass through Q and be perpendicular to the plane, meeting the latter at R. Determine the projections of a point, S, in Q R produced, such that R S is equal to Q R. Join $p\,s$, $p'\,s'$, and find $t\,t'$, the point where the line P S meets the given plane.

The lines P T and Q T will lie in a plane perpendicular to the given plane and make equal angles with it. Also the sum of the distances of the point T from the points P and Q will be the least possible for any point in the given plane.

PROBLEM 87.

To determine a line which shall pass through a given point and meet two given lines.

Let P be the given point and A B and C D the given lines.

FIG. 118.

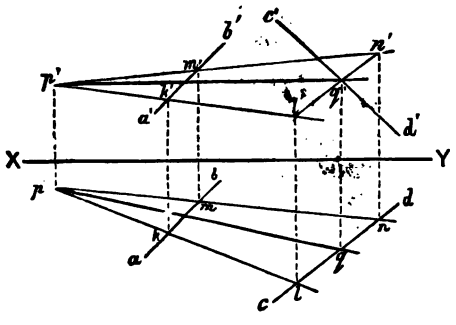

First method. Determine the traces of the plane containing the point P and the line A B; also the traces of the

plane containing P and C D. The line of intersection of these two planes is the line required.

Second method. Determine the projections of two lines, P K L and P M N, intersecting A B at the points K and M. Let these lines meet the vertical plane containing C D at the points L and N. The line L N will be the intersection of the plane containing P and A B with the vertical plane containing C D. Let L N meet C D at Q. P Q is the line required.

PROBLEM 88.

Given two straight lines not contained by the same plane, to determine the shortest distance between them and the projections of their common perpendicular.

Let A B and C D be the given lines. Determine by Problem 52 the traces L′M, M N of a plane which shall contain one of the given lines, say C D, and be parallel to the other. Take any point, P, in A B, and draw the projections of a line, P Q, which shall be perpendicular to the plane L′M N, and meet it at the point Q. The length of P Q is the shortest distance between the given lines A B and C D.

Determine the projections of a line parallel to A B and passing through Q (this line will lie in the plane L′M N). Let this line meet C D at the point R. Determine the projections of a line parallel to P Q, passing through R and meeting A B at S. The line R S is the common perpendicular to A B and C D.

PROBLEM 89.

To determine the centre and radius of a sphere the surface of which shall contain four given points.

Note. No three of the points must be in the same straight line, and if all four lie in the same plane they must lie on the circumference of a circle. In the latter case the problem is indeterminate, as any number of spheres can be found on the surface of which the points will lie.

Let A, B, C, and D be the given points. Determine by Problem 56 a plane bisecting the line A B at right angles. Since every point in this plane is equidistant from the points A and B it must contain the centre of the sphere. In like manner the centre of the sphere must lie in the planes bisecting B C and C D at right angles. Therefore the point of intersection of three planes must be the centre required, and the distance of this point from any one of the given points will be the radius of the sphere.

As there are four given points, six lines can be got by joining them, and the point of intersection of three planes bisecting at right angles *any three* of these six lines *not lying in the same plane* will be the centre of the sphere.

EXERCISES.

1. Explain what is meant by the angle between a line and a plane, and the angle between two planes. How are these angles measured? What is the name given to the angle between two planes?

2. The vertical and horizontal traces of a plane make angles of 50° and 20° respectively with X Y. A horizontal line has its plan inclined at 50° to the horizontal trace. Determine the angle between the line and the plane.

3. Find the angle between X Y and the plane given in the preceding exercise.

4. On X Y take two points, M R, $2\frac{1}{2}''$ apart. Make an angle R M L′ equal to 60° and M R L′ equal to 40°. L′M is the vertical trace of a plane whose horizontal trace is parallel to L′R, and L′R is the vertical trace of a plane whose horizontal trace is parallel to L′M. Determine (*a*) the angle between these two planes; (*b*) the traces of the plane bisecting the angle between these planes.

5. Two planes are inclined at 50° and 65°; their intersection is inclined at 40°. Determine the angle between them.

6. Draw a triangle, $a\,b\,c$ ($a\,b = 2\frac{1}{2}''$, $b\,c = 1\frac{1}{2}''$, $c\,a = 3\frac{1}{2}''$). $a\,b$ is the plan of a line lying in a plane having $a\,c$ for its

horizontal trace, $b\,c$ being on the ground line. The elevation of A B makes an angle of 45° with the ground line. Draw the traces of a plane to contain A B, and make an angle of 75° with the first plane.

7. A vertical line has its horizontal trace at a point on the horizontal trace of a plane which is inclined at 50°. Determine the traces of a plane which shall contain the line and make an angle of 70° with the plane.

8. The plan of a horizontal line makes an angle of 35° with the horizontal trace of a plane inclined at 40°. The line is 1·5″ above the horizontal plane. Show the traces of a plane to contain this line and make an angle of 60° with the plane.

9. Explain briefly how you would solve Problem 80 if the given point were in the given plane.

10. Represent by its traces a plane perpendicular to the vertical plane and inclined at 40° to the horizontal plane; also a plane making an angle of 70° with this plane, and inclined at 75° to the horizontal plane.

11. Referring to fig. 103 (Part I.), determine the projections of the lines passing through the point $p\,p'$, and meeting the line $a\,b$, $a'b'$ at angles of 60°.

12. The vertical and horizontal traces of a plane make angles of 35° and 30° respectively with X Y. A line, A B, lying in this plane has its plan inclined at 30° to X Y. Determine the projections of a line lying in this plane and making an angle of 35° with A B.

13. Determine a line inclined at 33°, lying in a plane inclined at 50°. This is the orthographic projection on that plane of a line which makes an angle of 40° with it. Determine the plan of this latter line and its inclination.

14. Referring to fig. 103 (Part I.), through p' draw $p'q'$ perpendicular to $a'b'$, and through p draw $p\,q$ perpendicular to $a\,b$. Determine the traces of a plane containing the line P Q and making with A B an angle of 15°.

15. Determine the traces of a plane which shall contain the point P (fig. 103), make an angle of 20° with A B, and have an inclination of 80° to the horizontal plane.

16. Two planes at right angles to one another are inclined at 50° and 60°. Represent them by their traces.

17. Determine the traces of three planes which are mutually at right angles, two of them being inclined at 35° and 70° respectively.

18. The traces of a plane both make 45° with X Y. Draw the traces of a second plane inclined at 60° to the horizontal plane and perpendicular to the first.

19. *o a*, *o b*, *o c* are the plans of three lines which form a solid right angle; the angle *b o a* is 130° and the angle *a o c* 125°. Draw an elevation of them on a ground line making an angle of 75° with *o a*.

20. Each of three lines meeting in a point, O, is perpendicular to the plane containing the other two; two of them are inclined at 30°, 45°. Show them by a plan and an elevation when O is 3″ above the paper and in the plane of the elevation.

21. L′M, the vertical trace of a plane, makes with X Y the angle L′M Y = 42°, and the horizontal trace M N makes with X Y the angle N M Y = 32°. A point, A, is 1·5″ in front of the V.P. and 1·75″ above the H.P. Another point, B, is 2″ in front of the V.P. and 1·5″ above the H.P. The line *a a′* cuts X Y at a point 1″ from M measured towards Y, and the line *b b′* cuts X Y at a point 2·5″ from M measured towards Y. Determine the projections of the lines which will pass through A and B, meet on the plane L′M N, and make equal angles with the plane.

22. A line making an angle of 35° with X Y and meeting it at the point M is both horizontal and vertical trace of a plane. A point, A, has its plan 2½″ below and its elevation 1″ above X Y, *a a′* passing through the point M. Another point, B, has its plan and elevation coinciding at a point 1″ below X Y and 1½″ from the line *a a′*. Through the points A and B draw lines to meet on the plane and make equal angles with it.

23. Two lines are inclined at 30° and 40°; they are 2″ apart where they are nearest to one another, and this line of 2″ is inclined at 28°. Show plan and elevation.

24. A line, A B, meets X Y at A. The angle b'A Y = 70°, and the angle b A Y = 30°. A second line, C D, meets X Y at C. The angle d'C Y = 60°, and the angle d C Y = 70°. Show the projections of the common perpendicular to A B and C D, and find its length. Make A C=3″.

25. State in words how you would solve the following problem. Given the projections of two straight lines and the traces of a plane: to draw the projections of a line to intersect each of the given lines and be perpendicular to the given plane.

26. Determine the projections of the sphere on the surface of which the following four points are situated:—A $\frac{1}{2}$″ in front of the V.P. and $2\frac{1}{2}$″ above the H.P.; B 2″ in front of the V.P. and 2″ above the H.P.; C $2\frac{3}{4}$″ in front of the V.P., and $\frac{1}{2}$″ above the H.P.; D $1\frac{1}{2}$″ in front of the V.P. and $3\frac{1}{4}$″ above the H.P. The feet of the perpendiculars from b, c, and d on X Y are at distances 2″, $\frac{3}{4}$″, and $\frac{1}{2}$″ respectively from the foot of the perpendicular from a on X Y, all measured in the same direction.

27. The plans of two lines contain an angle of 110°. The lines themselves are at right angles, and one of them is inclined at 27°. What is the inclination of the other?

CHAPTER XI.

PROJECTION OF SOLIDS.

PROBLEM 90.

To draw the projections of a solid, having given the inclinations of one face, and of a line in that face.

The general solution of this problem is well illustrated by Example 3. Examples 1 and 2 are simple, and for their solution do not require the whole of the construction required for the general case.

EXAMPLE 1. *A right prism* 2″ *long has a square of* $1\frac{1}{2}$″ *side for its base. To draw a plan of this solid when the base is inclined at* 50°, *and one side of this base is inclined at* 20°.

First draw by Problem 71 the plan *a b c d*, and elevation *a′b′c′d′* of the square of $1\frac{1}{2}$″ side, which is the base of the prism, when its plane is inclined at 50° and one side at 20°. From *a′*, *b′*, *c′*, and *d′* draw lines *a′e′*, *b′f′*, *c′g′*, *d′h′*, 2″ long, perpendicular to L′M; these lines will be the elevations of the

FIG. 119.

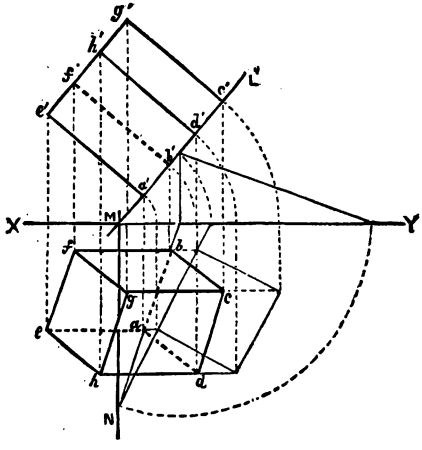

long edges of the prism. From the points *e′*, *f′*, *g′*, *h′* draw perpendiculars to X Y to meet lines through *a*, *b*, *c*, and *d* parallel to X Y. *e f g h* will be the plan of the upper end of the prism, and *a b c d* will be the plan of the lower end, while the lines *a e*, *b f*, *c g*, *d h*, will be the plans of the long edges.

EXAMPLE 2. *A square pyramid, side of base* $1\frac{1}{2}$″, *altitude* $1\frac{1}{2}$″, *has its base inclined at* 60°, *and one side of that base inclined at* 30°. *To draw its projections.*

As in Example 1, first determine by Problem 71 the plan *a b c d*, and elevation *a′b′c′d′* of the square which is the base of the pyramid when its plane is inclined at 60°, and one side at

30°. Next determine the projections $p\,p'$ of the foot of the perpendicular from the vertex of the pyramid on to its base. The foot of this perpendicular will in this case be at the centre of the base.

Through p' draw $p'v'$ $1\frac{1}{2}''$ long and perpendicular to L'M. From v' draw $v'v$ perpendicular to X Y to meet $p\,v$ parallel to

FIG. 120.

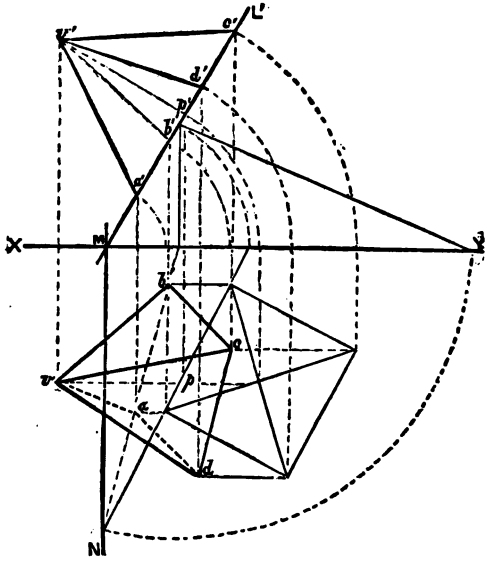

X Y at v; join v with a, b, c, and d; this completes the plan of the pyramid, and if v' be joined with a', b', c', and d', this will complete an elevation.

Of course from this plan and elevation any number of elevations may be drawn.

EXAMPLE 3. *To draw the plan of a right hexagonal prism when one rectangular face is inclined at* 60°, *and a long side of that face is inclined at* 30°. *Length of prism* 2″, *base* 1″ *side.*

As in the preceding examples, determine by Problem 71 the projections $a\,b\,c\,d$, $a'b'c'd'$ of the rectangular face when its plane is inclined at 60°, and one long side at 30°.

$A_1B_1C_1D_1$ is the rectangular face brought into the horizontal plane by turning its plane about its horizontal trace.

From the hexagon $e_1'f_1'$ complete the plan e_1g_1 of the prism when resting with its face A B C D on the horizontal plane.

FIG. 121.

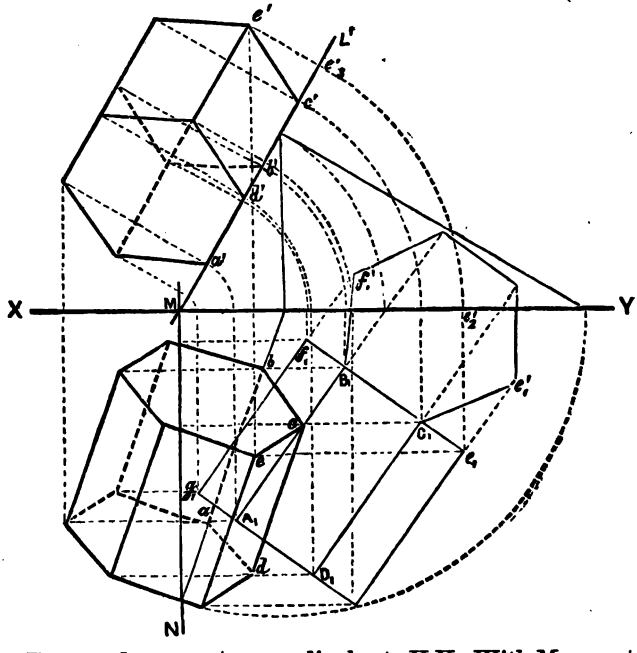

From e_1 draw $e_1\ e_2'$ perpendicular to X Y. With M as centre and M e_2' as radius, describe the arc $e_2'e_3'$ to meet L'M at e_3'.

Draw $e_3'e'$ perpendicular to L'M, and equal to the distance of e_1' from $X_1\ Y_1$. From e' draw $e'e$ perpendicular to X Y to meet a line through e_1 parallel to X Y at e.

Proceeding with all the angular points of the prism as just explained for the point E, the required plan is obtained.

PROBLEM 91.

To draw the projections of a solid having given the inclinations of two intersecting lines connected with it.

Determine by Problem 60 the plane containing the lines whose inclinations are given. Bring this plane with the lines upon it into the horizontal plane by turning it about its horizontal trace. On these lines thus brought into the horizontal plane complete the plan of the solid, and proceed exactly as in Problem 90.

PROBLEM 92.

Given the heights of three points in a solid: to draw its projections.

Determine by Problem 74 the plane containing the three points, whose heights are given. Bring this plane with the points upon it into the horizontal plane by turning it about its horizontal trace. About these points thus brought into the horizontal plane complete the plan of the solid, and proceed exactly as in Problem 90.

PROBLEM 93.

Given the inclinations of the base, and one face of a solid, the base and the face being at right angles to one another: to draw its projections.

First determine L′M N, the plane of the base of the solid, M N, the horizontal trace, being perpendicular to X Y

Next determine by Problem 80 a plane, L′P N, perpendicular to the plane L′M N, and inclined at an angle equal to the inclination of the face, which is given.

Find L N, the line of intersection of these two planes. Now bring the plane L′M N with the line L N upon it into the horizontal plane. On the line thus brought into the horizontal plane construct the figure, which is the base of the solid, and complete the construction exactly as in Problem 90.

PROBLEM 94.

Given the inclinations of two faces of a solid which are not at right angles to one another: to draw the projections of the solid.

Denote the faces whose inclinations are given by A and B, A denoting the base if one of the two faces is the base.

Determine the plane L′M N of the face A, the horizontal trace M N being perpendicular to X Y.

Next determine by Problem 80 a plane, L′P N, having an inclination equal to that of the face B, and making with the plane L′M N an angle equal to the angle between the faces A and B.

Find the intersection, L N, of these two planes. Now bring the plane L′M N, with the line L N upon it, into the horizontal plane by turning it about its horizontal trace, M N.

On the line thus brought into the horizontal plane construct the figure which forms the face A; that side of the face A which is adjacent to the face B being made to coincide with the line. The remainder of the construction is exactly the same as in Problem 90.

EXERCISES.

1. The plane of one face of a cube of 2·75″ edge is inclined at 50°, and one edge in that plane is inclined at 25°. Draw the plan of the solid, and an elevation on a vertical plane parallel to a diagonal of the cube.

2. Draw the plan of a square pyramid (base 2·25″ side, axis 3″) when its base is inclined at 45° and one edge of that base at 30°.

3. Draw the plan of a square pyramid—side of base 2″, axis 2½″—when the plane of its base is inclined at 40° and one diagonal of that base is inclined at 30°. What is the inclination of the other diagonal?

4. Draw the plan of a cube when the plane containing two of its diagonals is inclined at 30° and one of these diagonals is inclined at 20°. Edge of cube 2″.

5. A right pyramid 3″ high has for its base a regular

pentagon whose diagonal, A C, is 2·5″. This base is inclined at 50°, and A C is inclined at 30°. Draw the plan of the solid, and determine the horizontal trace and inclination of the face V A B.

6. Draw the plan of an octahedron of 2·5″ edge when the plane containing two diagonals is inclined at 50° and one of them at 35°.

7. A right prism has for its ends equilateral triangles of 2″ side and is 3″ long. Draw the plan of the prism when one of its sides is inclined at 40° and a long edge of that side at 20°.

8. Draw the plan of a pentagonal pyramid when one of its triangular faces is inclined at 60° and one long edge of that face is inclined at 50°. Side of base 1·25″, axis 2·5″.

9. The plane containing one edge of a tetrahedron and bisecting another is inclined at 50°, and the former edge is inclined at 30°. Draw the plan of the solid, the edge being 3″.

10. The two ends of one edge of a cube are 1·8″ and 2·4″ respectively above the H.P., and a face containing that edge is inclined at 70°. Draw the plan of the solid. Edge 2·5″.

11. A square prism (side of base 2″, height 2½″) has the diagonals of its base inclined at 30° and 45°. Draw its plan.

12. A prism whose length is 3″ has a hexagonal base of 1·5″ side. Draw a plan of this solid when two adjacent sides of the base are inclined at 30° and 20°, and an elevation on a vertical plane parallel to that side of the base which is inclined at 30°.

13. The base of a right pyramid is a pentagon of 1·5″ side, and the axis of the solid is 3″ long; draw its plan when two adjacent sides of the base are inclined at 20° and 35°.

14. A right hexagonal pyramid has two of the diagonals of its base inclined at 20° and 30°; draw its plan. Side of base 1·5″, axis 2·5″.

15. An octahedron of 3″ edge has two of its diagonals inclined at 30° and 37°. Draw its plan.

16. Draw the plan of a cube of 2″ edge when two of its diagonals are inclined at 25° and 35°.

17. One diagonal of an octahedron of 3″ edge is inclined at 30°, and an adjacent edge of the solid at 40°. Draw its plan.

18. Draw the plan of a pentagonal prism when one edge of

the base is inclined at 25° and an adjacent long edge of the solid is inclined at 50°. Side of pentagon 1·25″. Length of prism 2·5″.

19. A tetrahedron of 3″ edge stands with one corner on the horizontal plane, so that the plans of two edges which meet at that corner are 1·9″ and 1·5″ respectively. Draw the plan of the solid.

20. A square of 2·5″ side has three corners at 1·7″, 2·4″, and 3·8″ respectively above the horizontal plane. This is the base of a right pyramid whose axis is 3·25″. Draw the plan of the solid.

21. A cube of 2·5″ edge has the planes of two of its faces inclined at 50° and 70°. Represent it by a plan and an elevation on a plane parallel to a diagonal of the solid.

22. A prism 3″ long has an equilateral triangle of 2·3″ side for its base; draw its plan and an elevation of it when the planes of its base and of one face are equally inclined at 60° to the H.P.

23. The plane of one face of a regular tetrahedron (edge 2·5″) is vertical, that of another face is inclined at 50° to the H.P. Show the solid by a plan and elevation.

24. A right pyramid, having a regular pentagonal base of 1″ side and a height of 2″, lies with the base and one face inclined at 50°. Draw its plan.

25. Draw a rectangle, $a\,b\,c\,d$ ($a\,b = c\,d = 3\frac{1}{2}''$; $b\,c = d\,a = 1\frac{3}{4}''$); $a\,b$ and $c\,d$ are the plans of the diagonals of two opposite faces of a cube, $b\,c$ and $d\,a$ are the plans of two edges. Complete the plan of the cube.

CHAPTER XII.

ISOMETRIC PROJECTION.

As the projection of a line only shows its true length when the line is parallel to the plane of projection, it is general in making 'working' drawings of an object to arrange the latter

so that as many of its lines as possible are parallel to at least one of the co-ordinate planes. The object is then in a 'simple position.'

Now the student will have observed, in working the problems in Chapter III. on the projection of solids in simple positions, that the plan or elevation taken separately gave a very incomplete idea of the form of the object represented. But on coming to Chapter IV. he would notice that when the solid was turned over, so that its faces were inclined to the plane of projection, a single projection then gave a very fair idea of the form of the solid. Thus in fig. 51 the elevation a_1' shows very well that the solid represented is a square prism.

In like manner if we were to draw the plan of a house, supposing the latter to be, say, hung up by one corner, this plan would give a better idea of the form of the house than a simple plan and elevation when it was standing on the ground with one face parallel to the vertical plane of projection.

Such a drawing would apparently be open to the following objections: (1) If some simple rule cannot be given for finding the true lengths of the lines by direct measurement from the drawing, the latter would be useless as a 'working' drawing, unless the length of each line were marked in figures on the drawing. (2) If the only method of making it was by the rules of Chapter IV. its execution would be too laborious.

The object of this chapter is to show how these difficulties may be overcome.

The lengths of the plans of all lines which are inclined at the same angle to the horizontal plane will bear the same ratio to the true lengths of these lines. Thus all lines which are inclined at 60° will have their plans exactly half the true lengths of the lines.

Now, as most objects of which working drawings have to be made have their principal lines parallel to three directions which are mutually perpendicular, it is evident that such objects may be so placed that their lines will be equally inclined to the horizontal plane of projection, and therefore their plans will bear the same ratio to their true lengths, and

therefore the lines may be measured directly in the plan by a suitable scale; thus the first difficulty is removed.

When three lines, which are mutually perpendicular, are equally inclined to the horizontal plane, their plans will make 120° with one another. If therefore the lines of a solid are parallel to three lines which are perpendicular to one another, their plans will be parallel to three lines or axes which make 120° with one another. From this it is clear that the second difficulty is also removed.

When a solid is projected as above, the projection is said to be *Isometric.*

PROBLEM 95.

To construct an isometric scale.

Let $o\,a$, $o\,b$, and $o\,c$ be the plans of three lines meeting at O, which are mutually perpendicular; it is required to find the ratio of O A to $o\,a$.

Draw $a\,b$ perpendicular to $o\,c$. On $a\,b$, as diameter, describe a semicircle cutting $o\,c$ at O_1. $O_1\,a$ is the true length of the line of which $o\,a$ is the plan. The truth of this con-

FIG. 122.

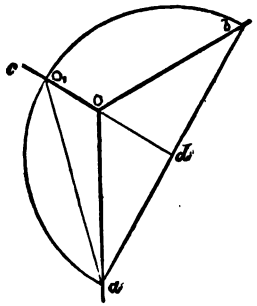

FIG. 123.

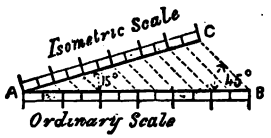

struction will be evident if the student refers to Problem 85 on the projection of a solid right angle.

It is evident that the angle aO_1o is 45°, and that the angle $O_1\,a\,o$ is 15°. Hence the following construction for drawing an isometric scale.

Draw an ordinary scale, A B (fig. 123). At A make the angle B A C = 15°, and at B make the angle A B C = 45°. Through the divisions of the scale A B, draw lines parallel to B C to meet A C. A C will be the required isometric scale.

If ad and O_1d (fig. 122) be denoted by 1, O_1a will be denoted by $\sqrt{2}$, and oa by $\frac{2}{\sqrt{3}}$, therefore

$$\frac{o_1 a}{o a} = \frac{\sqrt{2}}{\frac{2}{\sqrt{3}}} = \frac{\sqrt{3}}{\sqrt{2}}.$$

Hence the true length of a line is to its isometric projection as $\sqrt{3}$ is to $\sqrt{2}$.

PROBLEM 96.

To draw the isometric projection of a rectangular solid.

EXAMPLE. *A rectangular prism* 3″ *long*, 2½″ *broad, and* 1″ *thick, with a panel in the centre of one of its larger faces* 2″ *long*, 1½″ *broad, and* ¼″ *deep.*

Fig. 124 shows how to proceed in practice. If one of the isometric axes be taken perpendicular to the edge of the T-square as shown, then the others will make 30° with that edge. Hence all lines may be drawn with the 30° set-square. The lines $a\,e$, $b\,f$, &c., are drawn at right angles to the edge of the T-square with the right angle of the set-square, while $a\,b$, $b\,c$, &c., are drawn with the acute angle of the set-square as shown.

The dimensions of the prism are marked off along the lines which make 30° or 90° with the edge of the T-square. Thus $a\,b = 3''$, $a\,d = 2\frac{1}{2}''$, and $a\,e = 1''$, *measured from the isometric scale.*

If we mark off $a\,b = 3''$, $a\,d = 2\frac{1}{2}''$, and $a\,e = 1''$ *from an ordinary scale*, the projection would be of the correct proportion, but would be that of a solid larger than the real one in the ratio of $\sqrt{3} : \sqrt{2}$. In practice the latter method is preferred, since the lines on the drawing can be measured with an ordinary drawing scale.

The upper edges of the panel will be parallel to the edges

a b and *b c*, and the edge nearest to *b c* will be $\frac{1}{2}''$ from it, *measured in a direction parallel to a b*; in like manner the

FIG. 124.

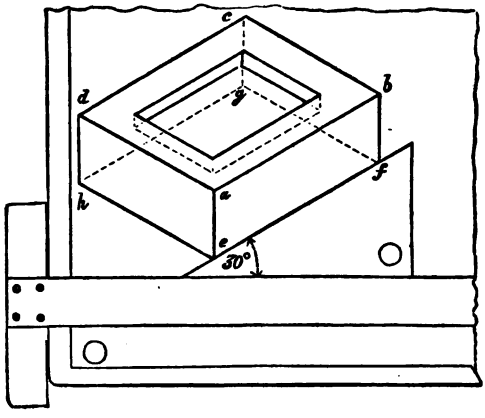

edge nearest to *a b* will be $\frac{1}{2}''$ from the latter *measured in a direction parallel to b c.* Having got the directions of two edges of the panel, its projection may be completed in the same way as the projection of the prism in which it is cut.

PROBLEM 97.

To determine the isometric projection of an object which is not entirely rectangular.

Strictly speaking an object which is not rectangular, or rather which has not each of its lines parallel to some one of three directions, cannot have an isometric projection, because such a solid cannot be placed so that all its lines are equally inclined to the plane of projection. A triangular prism, for instance, cannot, strictly speaking, have an isometric projection. Now an object may only be in part rectangular. This part may be drawn as in the preceding problem, and we have now to show how the projection of the object may be completed so as to show the non-rectangular part.

EXAMPLE 1. *A cube of 2″ edge has its top edges bevelled off*

at an angle of 30°, *so that the top face becomes* 1″ *square. To draw its isometric projection.*

We first draw the complete cube by the preceding problem as shown in fig. 125, the top part being dotted.

FIG. 125.

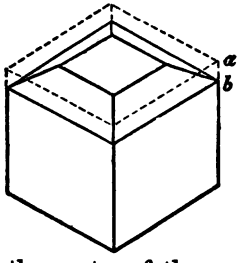

FIG. 126.

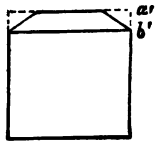

In the centre of the projection of the upper face we then place the projection of the square of 1″ side.

The sloping faces will meet the vertical faces of the cube in horizontal lines, whose distance from the top or bottom of the cube will be got from the elevation of it in fig. 126. In

FIG. 127.

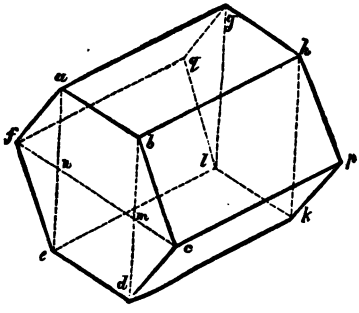

FIG. 128.

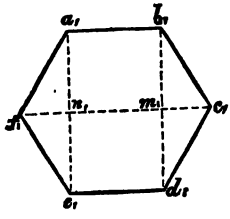

fig. 125 *a b* is made equal to *a′ b′* in fig. 126. The rest of the construction will be evident from an inspection of the figure.

EXAMPLE 2. *To draw the isometric projection of a right hexagonal prism ; side of base* 1″, *length* 2″.

The hexagonal prism may be divided into two triangular prisms and a rectangular prism. Fig. 128 shows the base of the hexagonal prism, the rectangle $a_1 d_1$ is the base of the

rectangular prism just mentioned, and the triangles $b_1 c_1 d_1$, $a_1 e_1 f_1$, are the bases of the triangular prisms. We first draw the isometric projection $a d h l$ of the rectangular prism. Through the middle points n, m of $a e$ and $b d$ draw $f c$, and make $m c = m_1 c_1$ and $n f = n_1 f_1$. Join $b c$, $c d$, $e f$, and $f a$. Draw $c p$ parallel to $b h$, and $h p$ parallel to $b c$, and join $p k$. Draw $f q$ parallel to $a g$, and $g q$ parallel to $a f$, and join $q l$. This will complete the isometric projection of the prism. But it must be remembered that it is only those lines which are parallel to an isometric axis, such as $a b$, $f c$, $b d$, or $b h$, which are isometrically projected, and which can be measured with an isometric or with an ordinary scale. Thus $b c$ is not equal to $a b$, although the lines of which they are the projections are really equal.

EXAMPLE 3. Fig. 129 is the isometric projection of the corner of an Oxford frame. This the student should draw

FIG. 129.

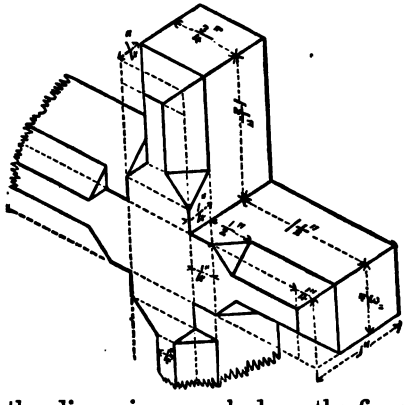

full size to the dimensions marked on the figure. *Nothing must be copied from the figure.* Only those lines which are seen need be shown. The dotted lines are construction lines. The student will notice that the object is made up of portions of rectangular prisms which intersect each other at right angles, and that portions of the edges of these are bevelled off like the cube in Example 1.

PROBLEM 98.

To draw the projection of a curved line on the surface of a solid which is isometrically projected.

We will illustrate this Problem by the following example.

EXAMPLE. *A cube of 2″ edge has a circle inscribed in each of three of its faces; to draw its isometric projection.*

The isometric projection of the cube may be first drawn. Then to draw the projection of any of the circles, which we know will be an ellipse, we may proceed in one or other of two ways. First, we may determine the projections of a number of points on the circle, and then draw a fair curve through them. Second, we may determine the axes of the ellipse, and then draw the curve by any of the rules for drawing ellipses.

Taking the first method, we first draw a square, fig. 130, equal to one face of the cube, and on this draw a number of

FIG. 130.

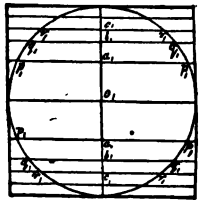

FIG. 131.

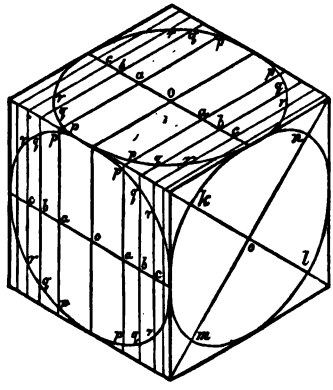

lines parallel to one side of the square to cut the inscribed circle as shown. Also draw a line through the centre at right angles to these lines. We then determine the isometric projection of these lines as shown in fig. 131, which shows this method applied to two of the circles. The rest of the

construction is that the distances $a\,p$, $b\,q$, $c\,r$, &c., in fig. 131, are made equal to $a_1\,p_1$, $b_1\,q_1$, $c_1\,r_1$, &c., respectively, in fig. 130, then a fair curve drawn through the points $p\,q\,r$, &c., determines the required ellipse.

If an isometric scale is used, the distances in fig. 131 will be measured with that scale, while those in fig. 130 will be measured with an ordinary scale.

No isometric scale has been used in any of the figures of this chapter.

Taking the second method which is shown applied to the third circle, the axes of the ellipse lie on the diagonals of the projection of the face of the cube. And if an isometric scale is used, the major axis $m\,n$ will be equal to the diameter of the circle, and the minor axis $k\,l$ will be to the major axis as $\frac{1}{3}\sqrt{3} : 1$, *i.e.* as $1 : \sqrt{3}$.

A diameter of the ellipse parallel to an isometric axis is called an *isometric diameter*, the half of an isometric diameter being an *isometric radius*.

An isometric diameter of the ellipse is to its major axis as the $\sqrt{2} : \sqrt{3}$.

Hence we have the proportion :—

Major axis : isometric diameter : minor axis :: $\sqrt{3} : \sqrt{2} : 1$

$$\text{or as } 1 : \frac{\sqrt{2}}{\sqrt{3}} : \frac{1}{\sqrt{3}}, \textit{ i.e. } \text{as } 1 : \tfrac{1}{3}\sqrt{6} : \tfrac{1}{3}\sqrt{3}.$$

Stating this in another way: If the major axis be denoted by 1, the isometric diameter will be denoted by $\frac{1}{3}\sqrt{6}$ and the minor axis by $\frac{1}{3}\sqrt{3}$.

Extracting the square root to three places of decimals, these expressions become 1, ·816 and ·577 respectively.

The above proportion is true whether an isometric scale is used or not.

If an isometric scale is not used, then the major axis of the ellipse will be greater than the diameter of the circle, and the ratio of the one to the other will be as $\sqrt{3} : \sqrt{2}$, or as $\frac{1}{2}\sqrt{6} : 1$.

Denoting the diameter of the circle by 1, the major axis is denoted by $\frac{1}{2}\sqrt{6}$, the isometric diameter by 1, and the minor axis by $\frac{1}{2}\sqrt{2}$. Extracting the square root, these numbers

become, correct to three places of decimals 1, 1·224, 1 and ·707 respectively

In *Axometric Projection* the three principal lines or axes of a rectangular solid are not equally inclined to the plane of projection, and although all those lines which are parallel to one axis have their projections drawn to the same scale, those which are parallel to another axis will have their projections drawn to a different scale. Thus in the axometric projection of a rectangular box one scale would be required for measuring its length, another for its breadth, and a third for its depth. These three axometric scales are determined in a manner similar to that for the isometric scale shown in figs. 122 and 123. Of course the angles at A and B, fig. 123, will not necessarily be 15° and 45°, but must be found by the construction shown in fig. 122, *i. e.* the angle at A; fig. 123 must be made equal to the angle $O_1\ a\ o$, fig. 122, and the angle B equal to the angle $a\ O_1\ o$.

It will be observed that isometric projection is just a particular case of axometric projection.

EXERCISES.

1. Six right square prisms $1\frac{1}{4}''$ long have their bases coinciding with the faces of a cube of $\frac{3}{4}''$ edge. Draw the isometric projection of the solid formed.

2. On each face of a cube of 1″ edge stands an equal cube. Make an isometric view of the solid formed by these seven equal cubes. An isometric scale is not to be used.

3. A box without a lid has the following dimensions outside—length 6″, breadth 4″, depth $2\frac{1}{2}''$. The sides and bottom are $\frac{1}{2}''$ thick. Draw an isometric view of the box.

4. Draw an isometric projection of the steps given in fig. 57, p. 46, Part I.

5. A sketch with dimensions is given of the pieces for a mortice and tenon joint in woodwork (fig. 132). Draw an isometric projection of these pieces. Scale $\frac{1}{2}$.

6. A wooden box has the following dimensions outside when the lid is shut—length 12″, breadth 8″, depth 5″. The depth of the lid outside is $1\frac{3}{4}''$. In the interior of the box there is a tray of the same length and breadth as the inside of the box, and having a total depth of 1″, its upper surface being $\frac{1}{4}''$ above the top edge of the box. This tray is divided into six equal compartments by one partition along its length and two across its breadth. The wood of which the box is made is $\frac{1}{2}''$ thick, and all the parts of the tray are $\frac{1}{4}''$ thick. Draw an isometric projection of the whole when the lid is open 90°. Scale 4 inches to the foot.

FIG. 132.

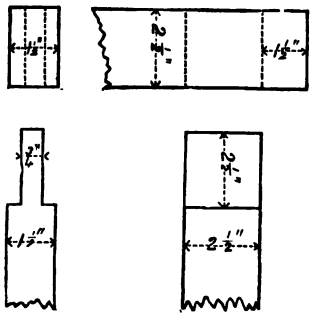

7. Draw the isometric projection of a hexagonal prism. Side of base $1\frac{1}{4}''$, axis 3″.

8. A square slab $2\frac{1}{2}'' \times 2\frac{1}{2}'' \times 1''$ has a hexagonal hole through it. The side of the hexagon is 1″, and one side is parallel to a side of the square. Draw an isometric projection of the solid.

9. Make an isometric projection of the dovecot shown in fig. 4, p. 5, Part I., making it three times the size shown. Omit the vertical post supporting the cot.

10. Draw the isometric projection of the solid described in Exercise 15, Chapter III.

11. A small cupboard, having one door, has a height of 24″, a width of 20″, and a depth of 12″, outside measurement when the door is shut. It stands on four legs, $1\frac{1}{2}''$ square and 3″ long. The interior is divided into four equal compartments by three shelves, $\frac{1}{2}''$ thick. Into the bottom compartment there fit two drawers, separated by a vertical partition, $\frac{1}{2}''$ thick. The thickness of the wood for the drawers is, for the front $\frac{1}{2}''$, for the rest $\frac{3}{8}''$. The sides, bottom, and back of the cupboard are $\frac{1}{2}''$ thick. The top is $\frac{5}{8}''$ thick and projects $\frac{1}{2}''$ at

the sides and front (the door being shut). The door is $\frac{1}{2}''$ thick and is stiffened by two cross bars on the inside, $2''$ broad, $\frac{1}{2}''$ thick and $1\frac{1}{2}''$ shorter than the width of the door. The front of the drawers when shut is in the same plane as the front of the shelves, which are $1''$ behind the outside of the door when the latter is shut. Draw an isometric projection of the cupboard when the door is open 90°, and one drawer is about half out. Make the projection so as to show as much of the interior as possible. Scale $\frac{1}{4}$.

12. An open wooden box is in the form of the frustum of a square pyramid standing on the smaller end. The upper or larger end is 2 feet square, the lower is 1 foot 3 inches square, outside measurement. The depth is 2 feet 3 inches, and the thickness of the wood is $2\frac{1}{2}$ inches. Draw its isometric projection. Scale $\frac{1}{9}$.

13. A circular mass, 2 feet diameter and 4 inches thick, has a hole through its centre 8 inches square. Draw its isometric projection. Scale $\frac{1}{6}$.

14. A cylindrical slab, $3''$ diameter, and $1''$ thick, is penetrated by a square prism $3''$ long, having a base of $1\frac{1}{2}''$ side. The axes of the solids are in the same straight line and their centres coincide. Make an isometric projection of the solids.

15. An iron stove is in the form of a square prism, $2'\ 3''$ high, the top being $1'\ 9''$ square. It is supported by four legs at the corners, $1'$ long and $2''$ square. At the top is a circular hole $1'\ 6''$ in diameter, and in the middle of one side is a rectangular opening, $1''$ high and $9''$ wide. Draw an isometric projection of it. Scale $\frac{1}{10}$.

N.B.—The thickness of the metal may be neglected.

16. Draw in isometric projection the solid described in Exercise 22, Chapter IV.

17. Three straight lines meet at a point a, and form with one another angles of 115°, 120°, and 125°. These are the plans of three edges of a cube meeting at the solid angle A. Complete the plan of the cube, it having an edge of $3''$.

18. Make an axometric projection of the pieces of wood shown in the figure to Exercise 5. The projections of the

horizontal axes to make 110° with the projection of the vertical axis.

19. Draw an axometric projection of the cupboard mentioned in Exercise 11. The projections of the axes to be the same as in Exercise 18.

CHAPTER XIII.

HORIZONTAL PROJECTION.

In Chapter I. it was stated that two projections of an object were required to completely represent it. In the preceding chapter it has been shown that when the solid is rectangular, and placed in a particular position, one projection is sufficient. In the present chapter will be explained another method of representing objects by one projection.

If the plan of a point is given, and also its distance from the horizontal plane, the position of the point is fixed. Also if the plan of a straight line is given, and the distances of two points in it from the horizontal plane, as much is known about the line as if a plan and elevation of it had been given.

In the 'horizontal projection' of a point, its plan is given, and its distance from the horizontal plane stated by a number or index; thus, a_8 denotes that the point whose plan is a is at a distance 8 units above the horizontal plane. If we wish to denote that the point A is 8 units below the horizontal plane, we mark the plan thus, a_{-8}. The negative, or minus sign, before the index 8 shows that the point A is below the horizontal plane.

A line, A B, is represented in 'horizontal projection' by its plan $a\,b$; the points a and b being indexed to show the heights of the points of which they are the plans.

Scale of Slope.—We have already shown that planes may be represented by their traces on the co-ordinate planes. In

horizontal projection planes are shown by their 'scales of slope.'

In fig. 133, $a\,b$ is the scale of slope of the plane L′M N. It will be noticed that the scale of slope consists of two parallel lines drawn at right angles to the horizontal trace of the plane, and across these a number of equi-distant lines parallel to the horizontal trace of the plane, the whole resembling an ordinary scale.

FIG. 133.

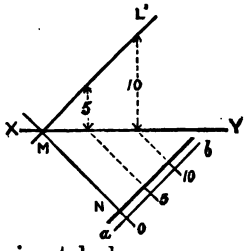

The numbers on the different points of the scale denote the distances of these points from the horizontal plane.

It will be noticed that one of the two lines of the scale at right angles to M N is thicker than the other—*that one being thicker which is on the left-hand side of a person ascending the plane.*

The Unit for the Indices.—In stating the distance of any point from the horizontal plane, of course any unit might be taken, but in all the problems and exercises of this chapter the unit will be $\frac{1}{10}$th of an inch, unless some other unit is given, so that an index 25 denotes that the point is $\frac{25}{10}$ths, *i.e.* 2·5″ above the horizontal plane.

Most of the problems which we have discussed on points, lines, and planes, in the preceding chapters, have corresponding problems in horizontal projection; but as the principles employed in their solution are generally the same in both cases, we will make a selection of a few problems only, so as to illustrate the method of horizontal projection.

PROBLEM 99.

From the figured plan of a line to determine its true length, inclination, and horizontal trace.

$a_4\,b_{13}$ is the given plan.

From a and b draw perpendiculars to $a\,b$, and make them

respectively equal to the indices of a and b. The line $A_1 B_1$ joining the tops of these perpendiculars will have a length equal to the real length of A B.

FIG. 134.

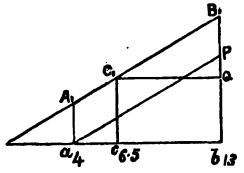

The angle between $A_1 B_1$ and $a\,b$ will measure the inclination of A B.

The point where $A_1 B_1$ meets $a\,b$ is the horizontal trace of A B.

The true length and inclination of A B may also be found by drawing a perpendicular b P equal to the difference between the indices of a and b, and joining a with P. In the example shown in the figure, b P would be 9 units long.

It is evident that the index of the horizontal trace of a line will be 0.

If one of the indices should be positive and the other negative, the perpendiculars must be drawn on opposite sides of $a\,b$.

PROBLEM 100.

In the figured plan of a line, to determine a point having a given index; also the index of a given point.

$a_4\,b_{13}$, fig. 134, is the given plan.

Proceed as in the preceding problem to determine the line $A_1 B_1$. Make b Q equal to the given index (in this case 6·5), draw Q C_1 parallel to $a\,b$, and $C_1\,c$ perpendicular to $a\,b$. c is the point required.

To determine the index of a given point, c, we proceed as before, and determine the line $A_1 B_1$. Then draw $c\,C_1$ perpendicular to $a\,b$ to meet $A_1 B_1$. The length of $c\,C_1$ is the index required.

PROBLEM 101.

Through a given point to draw a line parallel to a given line.

Let $a_2\,b_9$ be the given line, and c_5 the given point.

Through c draw a line parallel to $a\,b$. Make $c\,d = a\,b$. The index of d will be 7 greater than 5, *i.e.* 12, because the index of b is 7 greater than that of a.

FIG. 135.

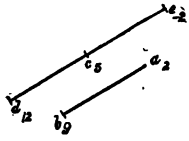

If we had produced the line $c\,d$ in the opposite direction, making $c\,e = b\,a$, then the index of e would be 7 less than that of c, because the index of a is 7 less than that of b. But the index of c is only 5, what then must be the index of e? The student who is familiar with elementary algebra will at once see that the index is -2. This will be clear to anyone from the following reasoning: C is 5 units *above* the horizontal plane, if therefore the point E is 7 units below C, it must be 2 units below the horizontal plane, but it has already been stated that distances *below* the horizontal plane are prefixed by the negative or minus sign; hence the index of e is -2.

The student must be careful to see that the indices on both lines increase or decrease together as we move along them in the same direction. If this is not attended to, the lines will have the same inclination, but will slope in opposite directions, and therefore cannot be parallel.

PROBLEM 102.

To determine the inclination of a given plane.

Let $a\,b$ be the scale of slope of the plane.

Since the long lines of the scale of slope are at right angles to the horizontal trace of the plane, it is evident that the inclination of these lines will be the same as the inclination of the plane. Hence if b P be drawn perpendicular to $a\,b$, and made equal to the difference of the indices of b and a, the angle P $a\,b$ will measure the inclination of the plane.

FIG. 136.

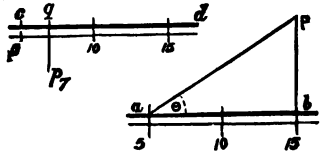

PROBLEM 103.

To determine a plane to contain a given point, and be parallel to a given plane.

Let p_7 be the given point, and $a\,b$ the given plane (fig. 136).

Since the horizontal traces of parallel planes are parallel it is clear that their scales of slope, which are at right angles to these traces, must also be parallel. Draw, therefore, the long lines $c\,d$ of the required scale of slope parallel to $a\,b$, and in any convenient position. Through p draw a line, $p\,q$, at right angles to $c\,d$. $p\,q$ will be the plan of a horizontal line lying in the required plane, and q will therefore have the same index as p.

The scale of slope $c\,d$ must be graduated in the same way as $a\,b$; that is to say, the difference of the indices of a given length on $c\,d$ must be equal to the difference of the indices on an equal length of $a\,b$.

PROBLEM 104.

To determine (1) *the distance between two parallel planes;* (2) *a plane parallel to a given plane, and at a given distance from it.*

Let $a\,b$ and $c\,d$ be the given planes.

If the traces of these planes be found on a vertical plane perpendicular to their horizontal traces, and therefore parallel to their scales of slope, the distance between these traces will be the distance between the planes.

FIG. 137.

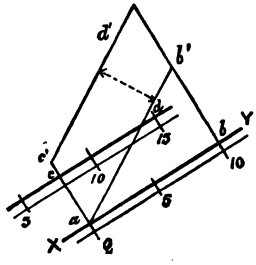

For convenience the vertical plane is taken so as to pass through $a\,b$, one of the scales of slope, so that the ground line XY coincides with $a\,b$.

$a\,c'$ and $b\,b'$ are drawn perpendicular to $a\,b$. $b\,b'$ is made equal to the index of b, and $a\,c'$ equal to the index of c. As in the example shown in the figure, the index of a is 0, $a\,b'$ is the vertical trace of the plane whose scale of slope is $a\,b$, and as the other plane is parallel to this one, a line $c'd'$ parallel to $a\,b'$ will be its vertical trace on the assumed vertical plane. The distance between $a\,b'$ and $c'd'$ is the distance between the given planes.

The second part of the problem is so simple as to require no explanation beyond the figure. We just notice that two planes may be determined—one on each side of the given plane.

PROBLEM 105.

To determine the plane containing three given points.

Let a, b, and c be the given points.

Find a point, d, in $a\,b$ having the same index as c by Problem 100. $c\,d$ must be a horizontal line in the plane containing a, b, and c; therefore the scale of slope of the plane containing these points must be at right angles to $c\,d$.

FIG. 133.

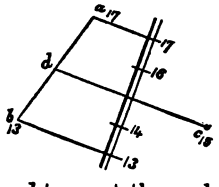

Where $c\,d$ cuts the scale of slope determines a point on it having the same index as c or d. If through a a line be drawn parallel to $c\,d$ to meet the scale of slope, a point is determined on the latter having the same index as a. These two points on the scale of slope having been found, the scale may be graduated if required.

PROBLEM 106.

In a given plane, to place a line having a given inclination so that it shall pass through a given point in the plane.

Let $a\,b$ be the given plane, and p the given point.

Through r, any point in the scale of slope, draw $r\,q$ perpendicular to the latter. Draw a line, $p\,Q$, in any convenient direction, and a line, $p\,P$, at right angles to $p\,Q$. Make $p\,P$ equal to the difference of the indices of p and r, and draw $P\,Q$, making the angle $P\,Q\,p$ equal to the given inclination. With centre p, and radius $p\,Q$, describe an arc cutting $r\,q$ at q. $p\,q$ is the line required.

FIG. 139.

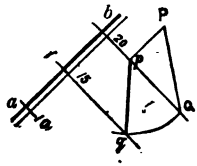

PROBLEM 107.

To determine the intersection of two given planes.

Let $a\,b$ and $c\,d$ be the given planes.

Through a and b, any two points in the scale of slope $a\,b$, draw the lines $a\,p$ and $b\,q$ at right angles to $a\,b$. Through points c and d in $c\,d$, having the same indices as a and b, draw lines perpendicular to $c\,d$.

FIG. 140.

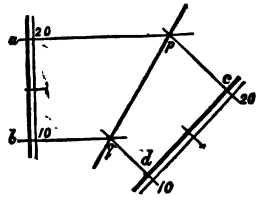

The line $a\,p$ is the plan of a horizontal line lying in the plane $a\,b$. $c\,p$ is the plan of a horizontal line lying in the plane $c\,d$. Now, as these lines have the same indices, they must be in the same plane; therefore they will intersect at a point of which p is the plan. Therefore p is a point in the intersection of the two given planes. In the same way, q is a point in the intersection; therefore the line $p\,q$ is the intersection of the planes.

If the scales of slope are parallel, the above construction will evidently fail, because the horizontals of both planes will be parallel, and therefore never meet. In this case a third plane is taken not parallel to either of the given planes, and its intersection with each of them found by the rule just given. This determines two lines whose intersection with one another will be a point in the intersection required. It is evident that

the intersection of the given planes will be a horizontal line; therefore a line perpendicular to the given scales of slope through the point thus found determines the intersection of the given planes.

If the third plane mentioned above be taken perpendicular to the given planes, the plans of its intersections with the latter will of course coincide, so that an elevation of them must be drawn to determine the point where they meet. This elevation is best taken on the third plane itself.

If the given scales of slope are nearly parallel, so that the horizontals of the planes meet at a very acute angle, it is best to find two points in the required intersection by the method explained for parallel planes—*i.e.* by cutting each of the given planes by two other planes.

PROBLEM 108.

To determine the intersection of a given line and a given plane.

Let $a\,b$ be the given line, and $c\,d$ the given plane.

Through any two points, a and b, in the given line, draw the parallel lines $a\,r$ and $b\,q$ in any convenient direction. Through c and d, points on the scale of slope having the same indices as a and b, draw the horizontals $c\,r$ and $d\,q$, meeting the parallels $a\,r$ and $b\,q$ at r and q. Join $r\,q$. The point p where the line $r\,q$ or $r\,q$ produced meets $c\,d$ or $c\,d$ produced is the point where the given line meets the given plane.

FIG. 141.

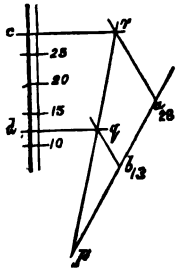

The theory of the above construction is as follows:—$a\,r$ and $b\,q$ are the horizontals of a plane containing the line $a\,b$. The line $r\,q$ is evidently the intersection of this plane with the given plane. The point p is therefore a point in both planes and also in $a\,b$; therefore it is the intersection required.

The intersection may also be found by taking an elevation of the line and plane on a ground line parallel to the scale of slope.

PROBLEM 109.

Through a given point, to draw a line perpendicular to a given plane.

The plan of a line which is perpendicular to a plane is at right angles to the horizontal trace of that plane, and will therefore be parallel to its scale of slope.

To figure the plan of the line (which, of course, passes through the figured plan of the point), determine the trace of the plane and the elevation of the point on a vertical plane parallel to the scale of slope. Through the elevation of the point draw a perpendicular to the trace of the plane; this perpendicular will be the elevation of the line, and from it the plan may be figured.

PROBLEM 110.

To determine a plane to contain a given point, and be perpendicular to a given line.

Taking the figured plan of the line for a ground line, determine the elevations of the point and line. Through the elevation of the point draw a line perpendicular to the elevation of the given line. This perpendicular will be the vertical trace of the required plane. The scale of slope of the plane will be parallel to the given figured plan of the line, and it may be graduated from the vertical trace found as above.

Contour Lines.—The plan of a portion of the earth's surface is made to show the form of that surface very clearly, by drawing on it the sections of the surface by a series of horizontal planes, at equal distances from one another. These sections are called *contour lines.* Fig. 142 shows the contoured plan of a hill. It is evident that the relative closeness of the contour lines shows the relative steepness of the different parts of the surface, the surface being steepest where the contour lines are closest together.

It is usual to affix to the contour lines (to a few of them, at least) their heights above some fixed horizontal plane.

PROBLEM 111.

Given a surface by its contoured plan, and a plane by its scale of slope: to determine the section of the surface by the plane.

Draw the plans of a number of horizontal lines lying in the given plane, and having the same indices as the contour lines. The points where these lines meet, the contour lines having

FIG. 142.

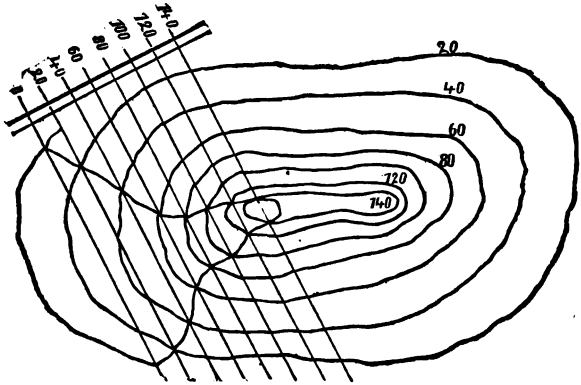

the same indices, are points in the section required. The complete section is obtained by drawing a fair curve through the points thus obtained.

EXERCISES.

1. Draw a triangle $a_6\, b_{13}\, c_2$; $a\,b = 2\frac{1}{2}''$, $b\,c = 2''$, $c\,a = 1\frac{1}{2}''$. Show the figured plans of three lines passing through A, B, and C, and parallel to the line joining C with the middle point of A B.

2. Show the scales of slope of two parallel planes inclined at 40°, the distance between the planes being $\frac{1}{2}''$.

3. An equilateral triangle of 2″ side has its angular points indexed 4, 15, and 18. Determine the true form of the triangle

of which this is the plan, and determine the scale of slope of its plane.

4. The plans of three points, a_5, b_{20}, c_{30}, form a right-angled triangle, the lengths of the two sides, $a\,c$ and $b\,c$, containing the right angle, being 1″ and 1·25″ respectively. Find the true form of the triangle A B C, and its area.

5. Determine the plan of the circumscribing circle of a triangle, A B C, whose figured plan is $a_4\ b_{25}\ c_{12}$ — $a\,b = 2{\cdot}8''$, $b\,c = 2{\cdot}6''$, $c\,a = 1{\cdot}9''$.

6. Three points, whose plans form an equilateral triangle of 3″ side, have indices 10, 20, and 30. From each point draw a line perpendicular to the line joining the other two.

7. Represent a plane inclined at 38°, and place in the plane a line inclined at 20°.

8. Determine the scale of slope of the plane containing the points given in Exercise 1, and represent a line lying in this plane inclined at 25° and passing through the point B.

9. Represent a plane inclined at 40° by its scale of slope, and two lines lying in this plane, one being inclined at 30° and the other at 20°, the lines to meet at a point whose index is 14. Determine the true angle between these lines.

10. The figured plans of six points, a_0, b_5, c_{10}, d_{15}, e_{20}, f_{25}, taken in order, form a regular hexagon of 1½″ side. Find the intersection of the plane containing A, C, and F, with the plane containing B, D, and E, and state its inclination.

11. An irregular five-faced solid has a square base (3″ side) on the horizontal plane. The remaining faces, which slope towards the centre of the square, are inclined at 40°, 50°, 60°, and 65°. Draw the plan of the solid.

12. Represent by its scale of slope a plane inclined at 60°. Also a point 1″ distant from the plane, and 2″ above the horizontal plane. Through the point draw a line inclined at 45°, and parallel to the plane inclined at 60°.

13. Draw a figure $a\,b\,c\,d$. $a\,b = 1{\cdot}5''$, $b\,c = 2''$, $c\,d = 1{\cdot}4''$, $d\,a = 1{\cdot}5''$, $a\,c = 2''$. The points a, b, c, and d are the plans of four points whose indices are 7, 26, 10, and 17 respectively. Determine the plan of the sphere on whose surface the points A, B, C, and D are situated.

14. Determine the foot of the perpendicular from the point B (Exercise 13) on the plane of A, C, and D.

15. Draw a triangle $c_{13\cdot5}\, d_8\, e_{11\cdot5}$ ($c\,d = 1\cdot4''$, $d\,e = 2\cdot1''$, $e\,c = 2\cdot7''$). C D is one edge, and C E one diagonal of a cube. Complete the plan of the solid.

16. Draw a square, $a_{15}\ b_{12}\ c_{20}\ d_0$, of 2″ side. Draw the figured plan of the common perpendicular to the lines A C and B D.

CHAPTER XIV.

CURVED SURFACES AND TANGENT PLANES.

Generation of Surfaces.—Surfaces may be considered as 'generated' by a line, straight or curved, moving in a definite manner. Thus a sphere may be generated by the revolution of a semicircle about its diameter, and a plane may be generated by a straight line moving parallel to itself along a fixed straight line.

The line by the motion of which a surface is generated is called the *Generatrix*, or *Generating Line*, of that surface.

A line which serves to constrain or direct the motion of the generatrix is called a *Directrix*.

Surfaces of Revolution.—Surfaces which may be generated by a line, straight or curved, moving so that any point in it is always at the same distance from and in the same plane at right angles to a fixed straight line are called *surfaces of revolution*.

The fixed straight line about which the generatrix revolves is called the *axis* of the surface.

Sections of a surface of revolution by planes at right angles to the axis are circles.

Sections by planes containing the axis are called *meridian sections*.

All meridian sections are exactly alike.

Examples of Surfaces of Revolution.—The sphere, the right

circular cylinder, and the right circular cone, are examples of surfaces of revolution, and have been already defined (pp. 26 and 27, Part I.)

A *Spheroid* is a surface generated by an ellipse rotating about one of its axes, and is called an *Oblate* or *Prolate Spheroid* according as the minor or major axis of the ellipse is the axis of revolution.

The *Hyperboloid of Revolution* is generated by a straight line revolving about an axis not in the same plane with it. The circle described by the common perpendicular to the generating line and the axis is sometimes called the *collar*, and sometimes the *throat*, of the surface.

A surface of revolution may also be generated by a circle of constant or of varying diameter, which moves so that its plane is perpendicular to, and its centre in, the axis, the diameter of the circle being regulated by some line, straight or curved, such as a meridian section of the surface.

In the cylinder of revolution the line which regulates the diameter of the generating circle is a line parallel to the axis, so that the circle is of constant diameter.

In the cone the regulating line or directrix is a straight line, passing through the vertex of the cone.

In the hyperboloid the regulating line is an hyperbola.

In the spheroid the regulating line is an ellipse. Here we may mention that the spheroid is by some writers called an ellipsoid; it is, however, only a particular case of the ellipsoid. The complete definition of the ellipsoid is as follows:[1]—'An ellipsoid may be generated by the motion of a variable ellipse, which moves so that its plane is always parallel to a fixed plane, and which changes its form so that its vertices lie in two ellipses having a common axis traced on planes perpendicular to each other, and to the fixed plane.'

If the ellipses which direct the moving ellipse were equal, the moving ellipse would become a circle, and the surface generated would be that of a spheroid.

Ruled Surfaces are such as can be generated by the motion

[1] Frost's *Solid Geometry*.

of a straight line. They may be divided into two classes—*Developable Surfaces* and *Twisted Surfaces.*

Developable Surfaces.—A surface is said to be developable when it can be 'folded back on one plane without tearing or creasing at any point.' The generating lines of developable surfaces 'move in such a manner that any two of their consecutive positions are in the same plane.'

All other ruled surfaces are twisted surfaces.

Examples of Ruled Surfaces.—The cylinder and cone represent the class of developable surfaces.

As examples of twisted surfaces we have the following:—

The *Hyperbolic Paraboloid*, or *Twisted Plane*, which is generated by a line moving parallel to a fixed plane, and meeting two fixed straight lines. If the guiding lines or directrices be curved instead of straight, the resulting surface is the *Twisted Cylinder.*

The hyperboloid of revolution is clearly also a twisted surface.

Perhaps the most important twisted surface is the *Screw Surface*, which may be generated by a straight line moving with a uniform velocity along a fixed straight line or axis, with which it makes a constant angle, and at the same time has a uniform motion of rotation about that axis.

PROBLEM 112.

To determine a cylinder to envelop a given sphere, the direction of the axis of the cylinder being given. Also to determine the curve of contact of the cylinder and sphere.

The axis $m\,n$, $m'n'$ of the cylinder will pass through $o\,o'$, the centre of the sphere. The curve of contact will be a great circle of the sphere contained by a plane passing through its centre and perpendicular to the axis of the cylinder.

The projections of the cylinder will consist of tangents to the projections of the sphere parallel to the projections of the axis of the cylinder, together with the traces of the surface on the planes of projection. Only the horizontal trace of the cylinder is shown in the figure.

To find the horizontal trace of the cylinder and the plan of the circle of contact, we proceed as follows. Draw an elevation of the cylinder and sphere on a vertical plane parallel to the axis of the cylinder, taking $m\,n$, the plan of that axis, for the new ground line. $m_1'n$ is the new elevation of the axis of the cylinder, and o_1' that of the centre of the sphere. The points a and b, where the tangents to the circle

FIG. 143.

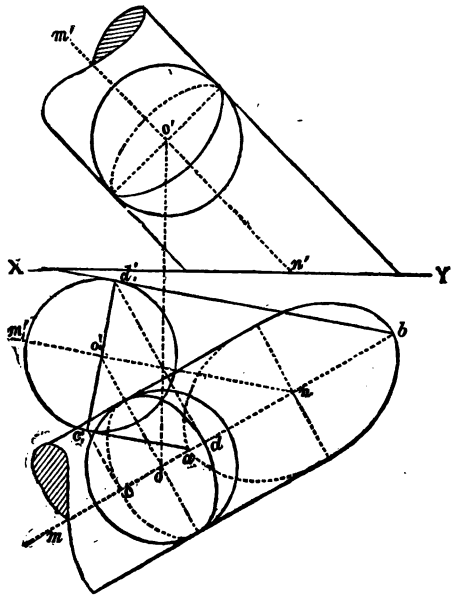

o_1', parallel to $m_1'n$, meet $m\,n$, are the extremities of the major axis of the ellipse, which is the horizontal trace of the cylinder. The minor axis of this ellipse passes through n (the horizontal trace of the axis of the cylinder), and is equal to the diameter of the cylinder or sphere.

The line $c_1'd_1'$, passing through o_1', and perpendicular to $m_1'n$, is the new elevation of the circle of contact. Perpendiculars from c_1' and d_1' to $m\,n$ determine $c\,d$, the minor axis of the ellipse; which is the plan of the circle of contact. The

major axis of this ellipse is a diameter of the circle which is the plan of the sphere, and is at right angles to $m\,n$.

The elevation of the circle of contact is obtained by taking an auxiliary plan of the cylinder and sphere on a plane parallel to the axis of the cylinder. The construction is similar to that for the plan.

The vertical trace of the cylinder may also be obtained from the same auxiliary plan.

PROBLEM 113.

To determine a cone to envelop a given sphere, the vertex of the cone being given. Also to determine the curve of contact of the cone and sphere.

Take an auxiliary elevation of the cone and sphere on the plan of the axis of the cone as a ground line. The points a and b, where the tangents from v_1' to the circle o_1' meet the line $v\,n$, are the extremities of the major axis of the ellipse, which is the horizontal trace of the cone. To determine the magnitude of the minor axis of this ellipse, which of course bisects $a\,b$ at right angles, and does not pass through the horizontal trace of the axis as in the case of the cylinder in the preceding problem, we perform the following construction. Through f, the middle point of $a\,b$, draw $f\,g_1'$ at right angles to $v_1'n$ to meet the latter at h_1', and $v_1'b$ at g_1'. With centre h_1', and radius $h_1'g_1'$, describe the arc g_1'K, and draw fK perpendicular to $f\,g_1'$ to meet this arc at K. fK is equal in length to the semi-minor axis.

The theory of the construction just given for finding the minor axis of the ellipse, which is the horizontal trace of the cone, is that a section of the cone perpendicular to its axis is taken by a plane whose trace on the auxiliary elevation is $h_1'g_1'$. The true form of this section is a circle, a portion of which is shown turned round into the plane of projection. The chord of this circle drawn through f, perpendicular to

$f g_1'$, gives the greatest width of the cone at the level of the horizontal plane.

The ellipse, which is the plan of the circle of contact, is found as follows. $c_1'd_1'$, the line joining the points of contact of the tangents from v_1' to the circle o_1', is the new elevation of the circle of contact. Perpendiculars from $c_1'd_1'$ to $v\,n$

FIG. 144.

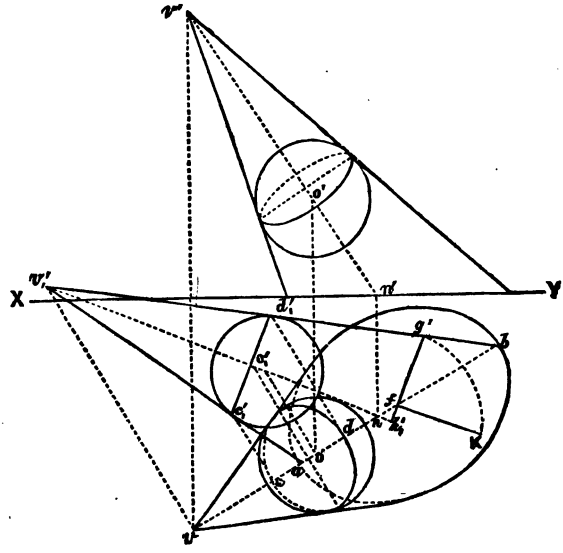

determine $c\,d$, the minor axis of the ellipse. The major axis is equal to the diameter of the circle, and therefore equal to $c_1'd_1'$.

The axes of the ellipse, which is the elevation of the circle of contact, are found by taking an auxiliary plan of the cone and sphere in the same manner as for the cylinder and sphere, and proceeding in precisely the same way as for the plan.

PROBLEM 114.

To determine the section, by a given plane, of a surface whose mode of generation is known.

The way in which the surface is generated being known, the projections of the generating line in any number of positions can be drawn. The intersection of the given plane with the generating line in each of these positions can then be determined. This gives a number of points on the intersection of the plane with the surface, and a fair curve through these will be the complete intersection.

When the given surface can be generated in a number of different ways, that mode of generation should be made use of which has the projections of its generatrices the simplest possible.

The sections of the cylinder and cone worked out in Chapter VIII. are examples of this problem.

PROBLEM 115.

To determine the intersection of a straight line with a given surface whose mode of generation is known.

Assume a plane to contain the line taking the position of the plane so that the projections of its intersection with the given surface are as simple as possible.

The intersection of the line with the intersection of the plane and surface will be the intersection required.

Tangent Planes.—If through a given point on a surface any two lines be drawn on that surface, the plane containing the tangents to these lines through the given point is the tangent plane to the surface at that point.

If a straight line can be drawn on the surface through the given point, as can be done on all ruled surfaces, the tangent plane will contain this line.

The normal to a surface at any point on it is the perpendicular to the tangent plane at that point.

PROBLEM 116.

To determine the tangent plane to a cone at a given point on its surface.

Let V denote the vertex of the cone, and P the given point on its surface.

Join V P, and produce it, if necessary, to meet the horizontal trace of the cone at Q. Through Q draw a tangent to the horizontal trace of the cone. This tangent will be the horizontal trace of the required plane. Its vertical trace can be determined from the condition that the plane contains the vertex of the cone.

PROBLEM 117.

To determine a tangent plane to a cone through a given point not on the surface of the cone.

The required plane will contain the line joining the given point with the vertex of the cone. The horizontal trace of the plane will pass through the horizontal trace of this line. Also, if the plane touches the cone, its horizontal trace will be a tangent to the horizontal trace of the cone.

The vertical trace can be determined from the condition that the plane contains the given point or the vertex of the cone.

If the horizontal trace of the line joining the given point with the vertex of the cone falls outside the horizontal trace of the cone, there will be two tangent planes to the cone passing through the given point. If the horizontal trace of the line falls inside the horizontal trace of the cone, the problem is impossible; and if it fall on the horizontal trace of the cone there will only be one plane. The preceding problem is just this latter case.

PROBLEM 118.

To determine the tangent planes to a given cone which shall be parallel to a given straight line.

Through the vertex of the cone draw a line parallel to the given line. By the construction explained in the preceding problem, determine the planes to contain the former line and touch the cone. These planes are the planes required. In the particular case when the given line is parallel to a generatrix of the cone, only one tangent plane can be determined parallel to that line. If the line through the vertex parallel to the given line falls within the cone, the problem becomes impossible.

PROBLEM 119.

To determine the tangent planes to a given cone whose axis is inclined which shall have a given inclination.

Determine a cone having its vertex at the vertex of the given cone, its base in the horizontal plane, and its base angle equal to the given inclination. The tangent planes to these two cones are the planes required. Problem 80, which is worked out on p. 4, is practically the same as this one.

Note. In the preceding problems on tangent planes to the cone, we have made use of its horizontal trace only; but in practice it may often be more convenient to take a vertical trace of the cone, and first determine the vertical trace of the tangent plane, which will be a tangent to the vertical trace of the cone. For example, if the base of the cone is circular and in a vertical plane, take this vertical plane as one of the planes of projection and use the trace of the cone on this plane, which trace would be a circle equal to that of the base, for determining the tangent plane.

These remarks also apply to the problems which follow on tangent planes to the cylinder.

PROBLEM 120.

To determine the tangent plane to a given cylinder at a given point on its surface.

Draw the generatrix of the cylinder through the given point. The tangent plane at the given point must contain this line. Produce this generatrix to meet the trace of the cylinder at H. A tangent to the trace at H will be one trace of the plane, and the other may be determined from the condition that the plane contains the given point.

PROBLEM 121.

To determine a tangent plane to a cylinder and passing through a given external point.

Through the given point draw a line parallel to the generatrices of the given cylinder. Let M be the trace of this line. Through M draw a tangent to the trace of the cylinder. This tangent will be one trace of the required plane, and the other may be found from the condition that the plane contains the given point.

PROBLEM 122.

To determine a tangent plane to a given cylinder which shall be parallel to a given straight line.

Let AB be the given line.

From any point, C, in AB draw CD parallel to the generatrices of the cylinder, and determine the traces L′M, and MN of the plane containing AB and CD. The plane required will be parallel to the plane L′MN.

A tangent, QR, to the horizontal trace of the cylinder parallel to MN will be the horizontal trace of the required plane, and a line parallel to L′M through the point where QR meets XY will be its vertical trace.

PROBLEM 123.

To determine the tangent plane to a given sphere at a given point on its surface.

Let P be the given point and O the centre of the sphere. Join OP. A plane through P perpendicular to OP is the plane required.

PROBLEM 124.

To determine a tangent plane to a given sphere which shall contain a given line.

First Solution. A tangent plane to the sphere containing the given line will be perpendicular to the radius of the sphere drawn from the point of contact. Hence this radius will be perpendicular to the given line, and therefore lie in a plane perpendicular to that line and passing through the centre of the sphere. This perpendicular plane will intersect the sphere in a great circle, and the tangent plane in a straight line, which will be a tangent to that circle. The point of contact of this tangent line will be the point where the tangent plane touches the sphere.

The point of contact being determined, the tangent plane is drawn through that point perpendicular to the radius at that point.

In fig. 145, oo' is the centre of the sphere and ab, $a'b'$ the given line.

Determine (Problem 56) a plane, P′QR, perpendicular to $ab, a'b'$, and containing the centre of the sphere. Find (Problem 54) the point cc' where the given line meets this plane.

Through the centre of the sphere draw a horizontal line, OS, in the plane P′QR. Let the plane P′QR revolve about the horizontal line OS until it becomes horizontal. When this is done the great circle which is the section of the sphere by the plane P′QR will coincide with the circle which is the plan of the sphere. The point C, after the rotation of the plane P′QR about the line OS will come to C_1; sC_1 being

equal to the hypotenuse of a right-angled triangle whose base is equal to sc, and perpendicular equal to the difference of the distances of s' (or o') and c' from XY. From C_1 draw a tangent C_1E_1 to the circle which is the plan of the sphere; E_1 being the point of contact. Produce C_1E_1 to meet so at T.

Now restore the plane P′QR to its natural position, carrying with it the tangent line. During this restoration the point E_1 will describe a circle whose plan will be a straight

FIG. 145.

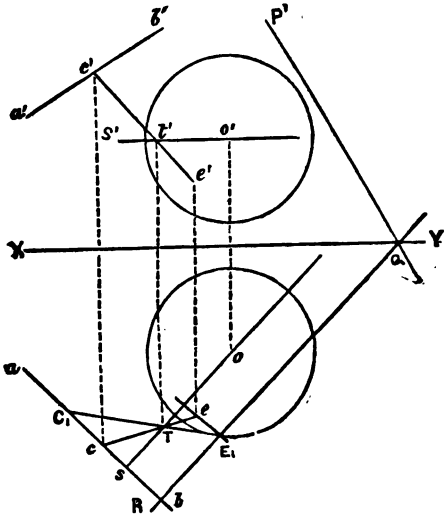

line perpendicular to os, while T will remain fixed. It is evident, therefore, that the line cT will be the indefinite plan of the tangent from C to the great circle, which is the section of the sphere by the plane P′QR, and the point e where cT meets the perpendicular from E_1 on to os will be the plan of the point of contact, the elevation of which is easily found.

A plane through ee' perpendicular to oe, $o'e'$, is a tangent plane containing ab, $a'b'$.

It is evident that there will be two tangent planes fulfilling the given condition. To find the second one, the other

tangent to the circle from C_1 is drawn, and the construction completed as for the first plane.

Second Solution. Take a point in the given line, and determine by Problem 113 a cone to envelop the sphere and have this point for its vertex. A plane containing the given line and touching this cone will also touch the sphere. This plane may be determined by Problem 117.

Third Solution. Take two points on the given line and consider them as the vertices of two cones enveloping the sphere. Determine by Problem 113 the projections of the circles of contact of these cones with the sphere. These circles of contact intersect at two points, which are the points of contact of the tangent planes to the sphere which contain the given line.

By taking the axis of one cone parallel to the vertical plane and the axis of the other parallel to the horizontal plane only one ellipse will need to be drawn.

PROBLEM 125.

To determine the cones enveloping two given spheres.

Two cones can be determined. One has its vertex on the line joining the centres of the spheres and lying between them; the other has its vertex on the line joining the centres of the spheres produced beyond the smaller sphere. Tangents to the projections of the spheres intersect the projections of the line joining their centres at the projections of the vertices of the cones.

PROBLEM 126.

To determine a tangent plane to two given spheres which shall contain a given point.

Determine by the preceding problem a cone to envelop the given spheres. A plane containing the given point and touching this cone will be the required tangent plane, and may be fonnd by Problem 117.

Another solution is to find the vertex of the enveloping cone by the preceding problem, and then determine by Problem 124 a plane to touch one of the spheres, and contain the line joining the vertex of this cone with the given point.

In general, four tangent planes to the two spheres may be found containing the given point.

PROBLEM 127.

To determine a tangent plane to three given spheres.

Determine the vertex of a cone enveloping two of the spheres, also the vertex of a cone enveloping any other two. A plane containing these two vertices and touching one of the spheres will also touch the other two.

Eight planes may be determined to touch the three given spheres. Two of these will have all the spheres on the same side, while the others will have one on one side and two on the other.

PROBLEM 128.

To determine the tangent plane to a given surface of revolution at a given point on its surface.

Let the axis of the surface be vertical, and let P be the given point.

All the tangent planes to the surface at points on it at the same level as P will have the same inclination, and the normals to the surface at these points will all meet on the axis at the same point. Hence if $p'r'$ be drawn parallel to XY to meet the outline of the elevation (or plane generatrix) of the surface at r', and a line, $q'r'$, be drawn perpendicular to the tangent at r', meeting the elevation of the axis at q', $q'p'$ will be the elevation of the normal to the surface at P. The plan of this normal will be the line joining p with the centre of the circle, which is the plan of the surface.

A plane through $p\,p'$, perpendicular to $p\,q$, $p'q'$, will be the tangent plane to the surface at P.

This plane also touches the right circular cone, whose projections are shown in the figure. This cone envelops the

FIG. 146.

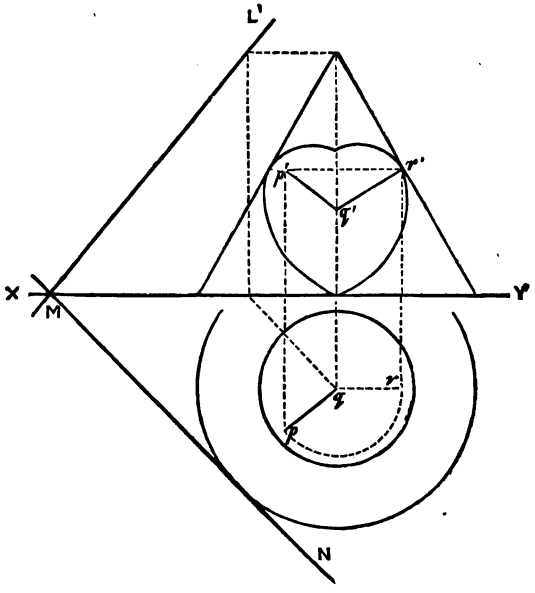

given surface; the line of contact being a horizontal circle passing through P.

PROBLEM 129.

To determine a cylinder to envelop a given surface of revolution, the generatrices of the cylinder to be parallel to a given line. Also to show the line of contact.

Let A B be the axis of the surface of revolution (supposed to be vertical), and let C D be the line to which the generatrices of the required cylinder are to be parallel.

Take any point, P, on the surface of revolution and determine the cone which, having its vertex V in A B, envelops the surface of revolution and touches it in a horizontal circle

through P. The construction for determining this cone is shown in fig. 146.

Determine by Problem 118 a plane tangential to this cone and parallel to C D. Find the line V R which is the line of contact between the cone and the plane (R is the point where the horizontal trace of the plane touches the circle, which is the horizontal trace of the cone).

Next determine the point Q where V R meets the circle of contact, and through Q draw Q N parallel to C D. The point Q is the point where the tangent plane touches the surface of revolution. The line Q N will be a tangent to the surface of revolution at the point Q, for it is parallel to C D, which is parallel to the tangent plane, and Q is in that plane; therefore Q N is in that plane.

The line Q N will be a generatrix of the required cylinder, Q will be a point in the curve of contact, and N, the horizontal trace of Q N, will be a point in the horizontal trace of the cylinder.

In the same way, any number of points on the line of contact may be determined, and also any number on the trace of the cylinder.

PROBLEM 130.

To determine a cone to envelop a given surface of revolution, the vertex of the cone being given. Also to determine the line of contact.

There are only two points of difference between the solution of this problem and that of the preceding one. The first point of difference is that, after determining the vertical cone enveloping the given surface, the tangent plane is made to pass through the given point which is to be the vertex of the required cone, instead of being drawn parallel to a given line.

The second point of difference is that, instead of drawing Q N through Q, parallel to a given line, we join Q with the given point.

EXERCISES.

1. A sphere, 2″ in diameter, rests on the H.P. Show the projections of a cylinder enveloping this sphere; show also the curve of contact. The plan of the axis of the cylinder makes 30°, and its elevation 50° with X Y.

2. The plan of the axis of a cone makes 30°, and its elevation 60° with X Y. A sphere, $1\frac{1}{2}''$ diameter, which is enveloped by this cone, has its centre at a point whose plan is 2″ from the plan of the vertex of the cone. Show the plan and elevation of the cone and curve of contact.

3. Two straight lines, A B and C D, have their plans situated as follows:—$ab = 4\frac{3}{4}''$, $cd = 3\frac{1}{4}''$; ab and cd intersect at a point, o, $2\frac{1}{2}''$ from a and 2″ from c. The angle $aoc = 80°$. The heights of the points A, B, C, and D above the H.P. are 0″, 2″, 0″, and $3\frac{1}{2}''$ respectively.

A surface is generated by a line moving parallel to the H.P. and always meeting the lines A B and C D. Determine the true form of the section of this surface by a vertical plane whose horizontal trace bisects the angle aoc. What is the surface termed, and can it be developed?

4. An hyperboloid of revolution has its axis vertical, and is cut by a plane inclined at 50°, whose horizontal trace is perpendicular to X Y. This plane cuts the axis at a point 1″ below the collar. The generatrix of the surface is inclined at 55°, and its perpendicular distance from the axis is $\frac{1}{2}''$. Show a plan of the section and determine its true form.

5. A sphere, 2″ diameter, touches both planes of projection. A plane, whose horizontal and vertical traces touch the plan and elevation of the sphere, respectively, and make 45° with X Y, cuts the solid into two portions. Show the plan and elevation of the lower portion.

6. A surface of revolution is generated by an ellipse rotating about its major axis, which is vertical: axes of ellipse, 3″ and 2″. A line, inclined at 45° to the H.P. and 30° to the V.P., passes through the middle point of the axis of the surface. Show the projections of the points of intersection of the line and surface.

7. A cone—base $2\frac{1}{4}''$ diameter, axis $2\frac{1}{2}''$ long—lies with its slant side on the H.P., and the plan of its axis makes 60° with X Y. Draw the projections of a straight line lying on the surface of this cone, the highest point in the line (a point in the base of the cone) being 1″ above the H.P. Then draw the traces of the plane which touches the cone along this line.

8. A conical surface with a semi-vertical angle of 25° has its axis inclined at 50°. Determine the planes which are inclined at 70° and are tangential to the surface.

9. The plan of the axis of a cone is 3″ long, the vertex is ·7″, and the centre of the base is 3·2″ above the H.P. Draw a tangent plane to the surface inclined at 75°. Radius of base, 1·5″.

10. Under what conditions as to form and position is it possible to draw a tangent plane to two right cones? Draw the projections of two unequal right cones (one having a vertical, the other a horizontal axis) such that they admit of tangent planes.

11. A cylinder, 1″ diameter, touches both co-ordinate planes. Draw the traces of the planes which touch the cylinder in a line 1″ from X Y. Show the intersection of the planes.

12. The horizontal trace of a cylinder is a circle 2″ diameter. The axis of the cylinder is inclined at 40°. Determine the two planes which, being inclined to the paper at 60°, shall touch the surface. The intersection of these planes to be shown, as well as the lines in which they touch the cylindrical surface.

13. A line, 3″ long, has one extremity on the horizontal plane and the other on the vertical plane; the plan of the line makes an angle of 45°, and its elevation an angle of 50° with XY. Considering this line as the axis of a circular cylinder $1\frac{1}{2}''$ in diameter, determine the traces of its surface on both planes of projection. Next draw (at pleasure) the plan and elevation of a line, and determine the traces of the planes which shall touch the cylinder and be parallel to this line.

14. A circle, $2\frac{1}{4}''$ in diameter, is the plan of a sphere resting on the H.P. A line, $2\frac{3}{4}''$ from the centre of the circle, is the horizontal trace of a plane which touches the sphere. Show the point of contact.

15. A sphere, 2″ diameter, rests on the horizontal plane. It is touched by three planes, all inclined at 50°, and equally inclined to one another. Determine the height of the pyramid so formed.

16. Draw a circle, 1·5″ radius, and take a point within it 1″ distant from the centre. The circle is the plan of a sphere whose centre is 2·5″ above the horizontal plane, and the point is the plan of one situated on the upper surface of the sphere. Through this point draw a straight line, which shall touch the sphere and be inclined at 30°.

17. A sphere, 1·75″ in diameter, touches both planes of projection. Determine the traces of a plane touching the sphere, and inclined at 60° and 50° to the horizontal and vertical planes respectively.

18. Draw a circle 1·5″ radius, and 3″ away from its centre a straight line. The circle is the plan of a sphere, whose centre is 2·5″ above the H.P., and the straight line is the plan of one inclined at 50°. Through the line draw a plane tangential to the sphere.

19. Draw the projections of a sphere having its centre on the ground line, also the projections of a line which does not meet the sphere, and is inclined to both co-ordinate planes. Determine a tangent plane to the sphere through this line.

20. Two spheres, radii 1·5″ and 1″, rest in contact on the horizontal plane. Determine a plane tangential to both and having an inclination of 50°.

21. An equilateral triangle of $2\frac{1}{2}''$ side is formed by three points, a_4, b_{10}, c_{22}. B and C are the centres of spheres of $1\frac{1}{2}''$ and 2″ diameter respectively. Determine a plane containing A and tangent to these spheres, rising from A towards B and C (unit = 0·1″).

22. Two circles, diameters $1\frac{1}{2}''$ and 2″, have their centres $2\frac{1}{2}''$ apart. The larger circle is the plan of a right cone (axis 2″ long), and the smaller one that of a sphere. Both

solids stand on the H.P. Determine a plane to touch both cone and sphere. The ground line to make 40° with the line joining the centres of the circles.

23. Three spheres, A, B, and C, have the plans of their centres at the angular points of an equilateral triangle of 2″ side. The diameters of the spheres are:—A, 2″; B, $1\frac{1}{4}$″; C, $\frac{3}{4}$″. The heights of their centres are:—A, $2\frac{1}{2}$″; B, $1\frac{1}{4}$″; C, $\frac{3}{8}$″. Determine a plane tangential to these spheres, showing the points of contact. Take the ground line parallel to *a b*.

24. An annulus, or 'anchor ring,' whose section is a circle 1·5″ in diameter, and whose *mean diameter* is $2\frac{1}{2}$″, rests on the horizontal plane. Determine the plan of its section by a plane inclined at 50°, touching its surface.

25. A surface is generated by a straight line always inclined at 65°, and always lying in a vertical plane, which touches a horizontal ellipse. The plane of this ellipse is 2·5″ above the paper, and its axes are 3″ and 2″. Show a section of this surface made by a plane to be assumed at pleasure, provided it is neither horizontal nor vertical.

26. The horizontal trace of an oblique cylinder is an ellipse: axes, 3″ and 2″. The plans of the generatrices (which are inclined at 55°) are parallel to the major axis. Determine a plane which will cut the cylinder in a circle.

CHAPTER XV.

DEVELOPMENTS AND THE PROJECTION OF SCREW THREADS.

In this chapter, when we speak of the surface of a prism, pyramid, cylinder, or cone, we exclude the bases or ends.

PROBLEM 131.

To determine the development of the surface of a prism.

The surface of the prism is made up of a number of parallelograms, and if the true forms of these parallelograms be

drawn and placed side by side, so that those angular points which are made to coincide coincide when on the surface of the prism, the resulting figure will be the development of the surface.

PROBLEM 132.

To determine the development of the surface of a pyramid.

The surface of the pyramid is made up of a number of triangles having a common vertex, and if the true forms of these triangles be drawn and placed side by side, so that those angular points which are made to coincide coincide when on the surface of the pyramid, the resulting figure will be the development of the surface. All the triangles which make up the development will have a common vertex.

PROBLEM 133.

To determine the development of the surface of a cylinder.

As was explained in Chapter III., the cylinder is a particular case of a prism. In fig. 147 is shown a prism inscribed in the surface of a right cylinder, the plan of the prism being the polygon which is inscribed in the circle which is the plan of the cylinder.

The development of the surface of the prism will clearly be a rectangle A K, made up of a series of rectangles equal to the sides of the prism. The side A H of the development of the prism is evidently equal to the perimeter of the polygon 1 2 3 . . . . . Now, if the sides of the prism be increased in number, its surface will more nearly coincide with that of the cylinder, and the line A H will be more nearly equal to the circumference of the circle 1 2 3 . . . . ; and in the limit when the number of sides on the prism is made infinite, the development of its surface will be the rectangle A K, in which the side A H is equal to the circumference of the circle 1 2 3 . . . . .

The vertical lines through the points 1 2 3 . . . . in the line A H are the positions of generatrices on the development which have their plans on the cylinder at the points 1 2 3 . . . . .

If an end of the cylinder is not at right angles to its axis, or if it is curved, as shown in the elevation by the curved line $b'd'$, the development will have one side curved. The points on this curve are got by making the development of the generatrices equal to their true lengths, which in this case are shown in the elevation. Thus C D is made equal to $c'd'$.

FIG. 147.

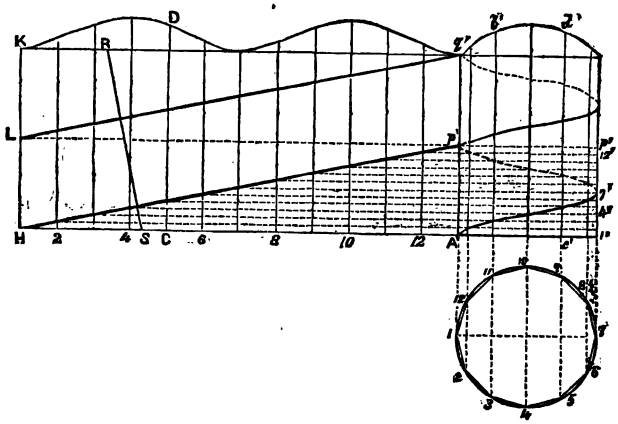

The Helix. The intersection of the surface of a circular cylinder with a screw surface having the same axis (defined on p. 47), is a curve known as the *helix*.

The helix may also be defined as the curve 'which is generated by the uniform motion of a point along a generating line of a right cylinder as the generating line revolves with uniform angular velocity about the axis of the cylinder.'[1]

The distance between one coil of a helix and the next, measured parallel to the axis, is called the *axial pitch* of the helix. The distance between one coil and the next, measured

[1] Frost's *Solid Geometry*.

along the shortest line on the surface of the cylinder, is called the *normal pitch.* If several helices be traced on the surface of the same cylinder at equal distances apart, the distance between two adjacent coils is called the *divided pitch.* When 'pitch' is mentioned without any qualification, 'axial pitch' is to be understood.

PROBLEM 134.

To determine the projection and development of a helix.

Divide the circle (fig. 147) which is the plan of the cylinder into any number of equal parts—say 12.

It is evident from the definition of a helix that if the generating point move round any fraction of the circumference of the cylinder, it will at the same time move in the direction of the axis of the cylinder a distance equal to the same fraction of the pitch. Thus, if the point move round the cylinder a distance shown in plan by the arc 12—that is, through $\frac{1}{12}$th of the circumference—it will at the same time rise to a height equal to $\frac{1}{12}$th of the pitch. In like manner, in moving round another $\frac{1}{12}$th of the circumference, it will rise another distance equal to $\frac{1}{12}$th of the pitch. Hence we have the following simple construction for drawing the elevation of the helix.

Divide the pitch $A'p'$ into as many equal parts as the circle in plan is divided into (in this case 12), and number them $1'2'3'$ .... Through these points $1'2'3'$ .... draw parallels to X Y to meet perpendiculars from the points 1 2 3 ... respectively. A fair curve drawn through the points thus obtained is the projection required.

The development of the helix is a straight line, and if two turns of the helix be developed we get two parallel lines, p'H and q'L, shown in the figure.

If a line R S be drawn on the development at right angles to p'H and q'L, this will be the development of a helix at right angles to the former one.

The perpendicular distance between the lines p'H and q'L is the normal pitch of the helix.

Fig. 148 shows the application of this problem to the drawing of a square double-threaded screw. The edges of each screw thread are formed by four helices, two being on the surface of one cylinder, and two on the surface of a smaller one. The pitch of each helix is the same.

FIG. 148.

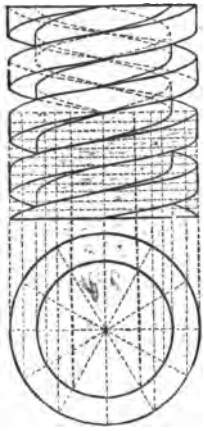

A triangular threaded screw would be shown by the projection of two helices of the same pitch, one on the surface of one cylinder, and the other on the surface of a smaller one.

The projection of a spiral (? helical) spring is just the projection of a screw thread with the smaller cylinder removed. If the spring is made of round wire, we conceive its surface as generated by a sphere whose centre moves along a helix which is the centre line of the wire. The projection of this helix is first drawn, and then the projection of the sphere in a number of different positions. Fair curves drawn to touch the latter will be the projection of the spring.

PROBLEM 135.

To determine the development of the surface of a cone.

The development of the cone is derived from that of the pyramid in the same way as the development of the cylinder is derived from that of the prism. Its form is a sector of a circle having a radius equal to the slant side of the cone, the length of the arc being equal to the circumference of the circle which is the base of the cone.

With v' as centre, and $v'a'$ as radius, describe the arc a'K. Step out this arc with the dividers, and make it equal to the circumference of the circle which is the base of the cone. $v'a'$K is the development of the cone.

The intersection of a screw surface with the surface of a cone whose axis coincides with that of the screw surface gives a curve which may be called a conical helix. The projection of this helix, which is shown in fig. 149, is drawn in almost exactly the same way as that of a helix on a cylinder. The development of this helix, which is also shown in fig. 149, is a spiral. The plan is also a spiral, and may be drawn in the same way as the development without using the elevation of the helix.

FIG. 149.

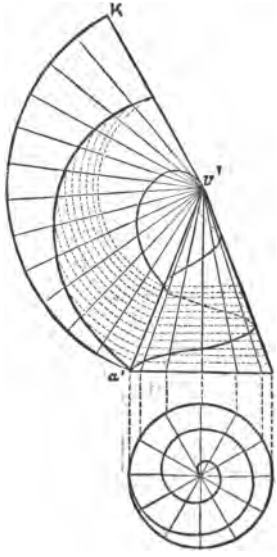

EXERCISES.

1. Draw the developments of the surfaces of the following solids:—

(*a*) A hexagonal prism, base $\frac{3}{4}''$ side, axis $2''$ long.

(*b*) The oblique prism mentioned in Exercise 4, Chapter III.

(*c*) A square pyramid, side of base $\frac{3}{4}''$, altitude $1\frac{1}{2}''$.

(*d*) The frustum of the pyramid mentioned in Exercise 7, Chapter VIII.

2. Draw the development of the surface of one of the prisms mentioned in Exercise 28, Chapter XVI., showing on the development the line in which the surface meets the surface of the other prism.

3. A cylinder $1\frac{1}{4}''$ in diameter and $2''$ long is cut into two parts by a plane which cuts its axis at an angle of 45°, at a point $\frac{3}{4}''$ from one end. Show the development of the surface of the larger portion.

4. A vertical cylinder $2''$ in diameter is cut by a plane inclined at 50°, and having a horizontal trace which touches the plan of the cylinder and makes 35° with the ground

line. Draw the elevation and development of the curve of section.

5. A cone is cut by a plane passing through the centre of its axis and inclined at 35°. 'Develop' the surface of the frustum. Diameter of base 3·5″, axis 3·5″.

6. Show two helices, one right-handed and the other left-handed, on a cylinder $1\frac{1}{2}''$ diameter; the former to be of 1″ pitch and the latter of $\frac{1}{2}''$ pitch.

7. A cylinder $1\frac{1}{2}''$ in diameter has two helices of equal pitch traced on its surface, their developments being at right angles to one another. Determine the projections of each helix and state the pitch.

8. A cylinder $1\frac{1}{2}''$ diameter and 3″ long has three helices of 3″ pitch traced upon it at equal distances apart. Draw their projections.

9. Represent a square-threaded screw of the following dimensions. Diameter over thread $2\frac{1}{2}''$, diameter at bottom of thread $1\frac{1}{2}''$, pitch 1″, thickness of thread $\frac{1}{2}''$. Show two complete turns of the thread.

10. A spiral spring, axis vertical, is of the form of a square screw thread. Side of square $\frac{1}{2}''$, external diameter on plan 3″, pitch $2\frac{1}{2}''$. Draw the elevation of one complete turn of the spring.

11. Draw a triangular or V-threaded screw $2\frac{1}{2}''$ diameter and $\frac{3}{4}''$ pitch, the angle of the V being 60°.

12. Make a sectional view of a nut for a triangular-threaded screw 2″ diameter, $\frac{3}{8}''$ pitch, and $\frac{1}{4}''$ deep. Height of nut $1\frac{3}{4}''$.

13. A spiral spring is made out of round steel wire $\frac{1}{2}''$ in diameter. The mean diameter of the spring is $2\frac{1}{4}''$, and its pitch $2\frac{1}{4}''$. Draw a plan and elevation of two turns of the spring.

14. Draw a circle 3″ in diameter and two radii $o\,a$, $o\,b$ making the angle $a\,o\,b = 140°$. In $o\,a$ take a point p 1·4″ from o, and in $o\,b$ take a point q ·2″ from o. The circle is the plan of a cone of revolution (altitude 3″): and p and q are the plans of two points on its surface. Draw the plan of the shortest line, which, lying on the surface of the cone joins the points P and Q; also an elevation on a ground line parallel to $o\,a$.

Hint. The development of the line is a straight line.

CHAPTER XVI.

INTERSECTION OF SURFACES.

THE general method of finding the intersection of two surfaces is as follows. Let A and B denote two given surfaces whose intersection with one another is required. Cut the surfaces A and B by a third surface C; the latter surface being so chosen and employed that the projections of its intersection with A and B are lines which can easily be drawn —such as straight lines and circles. Let A′ denote the line of intersection of C with A, and let B′ denote the intersection of C with B. Let the lines A′ and B′ meet at a point P (if the projections of A′ and B′ meet, then A′ and B′ must meet since they lie on the same surface C). Then the point P lies on the intersection of C with A, therefore it lies on A; it also lies on the intersection of C with B, therefore it lies on B, thus P lies on both A and B, therefore it must be a point in the intersection of A and B. By moving the surface C into different positions, or by cutting A and B by other surfaces similar to C, any number of points in the intersection of A and B may be determined.

PROBLEM 136.

To draw the projections of the intersection of two cylinders.

As a general rule cut the surfaces of the cylinders by planes parallel to their axes or generating lines. These planes will intersect the surfaces of the cylinders in straight lines, the intersection of which with one another determines points in the intersection required.

EXAMPLE 1.—*To show the elevation of the intersection of a vertical cylinder* 2″ *in diameter with a horizontal cylinder* 1·5″ *in diameter whose axis is parallel to the vertical plane of projection. The axes of the cylinders are* ·2″ *apart.*

Commence by drawing the plan and elevation of the cylinders.

Cut both cylinders by vertical planes parallel to the axis of the horizontal cylinder.

Referring to fig. 150, H.T. is the horizontal trace of one of these cutting planes. This plane will cut the vertical cylinder in vertical lines of which the points *a a* are the plans, and perpendiculars, through *a a* to X Y, the elevations. This same plane will cut the horizontal cylinder in two horizontal lines, of which *a b* will be the plan; it now remains to find

FIG. 150.

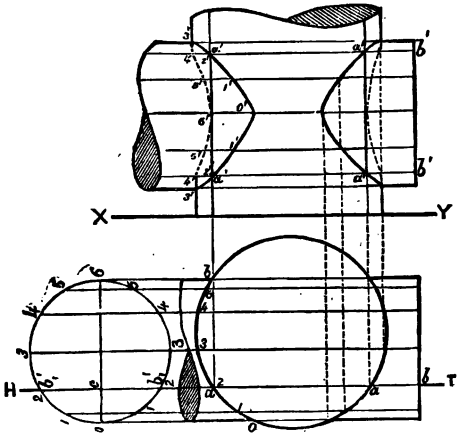

the elevations of these lines. Take an elevation of the horizontal cylinder on a plane at right angles to its axis; this elevation will be a circle 1·5″ in diameter. The cutting plane will have a trace on this new vertical plane which will coincide with its horizontal trace. The points b_1', b_1' where this trace cuts the circle just mentioned will be the end elevations of the lines A B, A B, in which the horizontal cylinder is cut by the cutting plane which we are considering, and the lengths cb_1', cb_1' will be the vertical distances of these lines from the horizontal plane containing the axis of that cylinder. Hence

the required elevations $a'\,b'$, $a'\,b'$ will be at distances equal to $c\,b_1'$ above and below the elevation of the axis of the horizontal cylinder.

Where $a'\,b'$, $a'\,b'$ meet the perpendiculars through a, a will determine four points in the elevation of the intersection required.

In like manner, by taking other planes, other points can be found as shown in the figure. The elevation of the intersection is completed by drawing 'fair' curves through the points thus determined.

By arranging the cutting planes symmetrically about the axis of the horizontal cylinder, as shown, the elevations of the lines on the back of that cylinder will coincide with the elevations of those on the front; thus the number of lines on the figure is diminished.

To avoid confusion the student should carefully number all the lines in the manner shown in the figure, all the lines lying in one cutting plane being marked with the same number.

EXAMPLE 2. *A vertical tube, external diameter* $2\frac{3}{4}''$, *internal diameter* $1\frac{1}{2}''$, *has a horizontal cylindrical hole bored through it* $1\frac{1}{4}''$ *in diameter. The axis of the hole is* $\frac{1}{4}''$ *from the axis of the tube. Draw an elevation on a vertical plane inclined at* 35° *to the axis of the hole.*

First determine the intersection of the boring cylinder with the outside of the tube in exactly the same way as in Example 1. The fact of the horizontal cylinder being inclined to the vertical plane will make no difference in the working, as the heights of all the lines in which the cutting planes intersect the horizontal cylinder will remain the same whatever be its inclination to the vertical plane.

Next, in like manner determine the intersection of the boring cylinder with the interior of the tube. It is found that in this example this intersection consists of one line only.

In the two preceding examples the intersections may

also be found by taking the cutting planes horizontal instead of vertical.

FIG. 151.

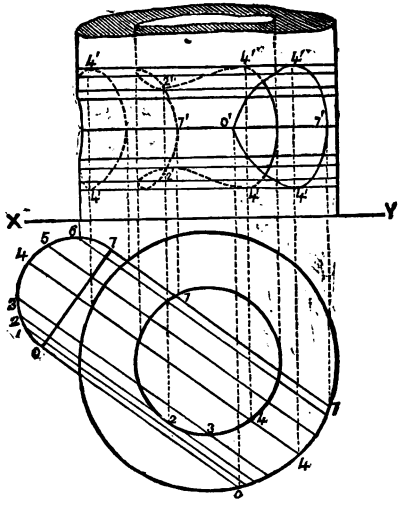

EXAMPLE 3. *The horizontal trace of a cylinder is an ellipse* $3'' \times 2''$ *whose major axis is parallel to* X Y. *The horizontal trace of a second cylinder is an ellipse* $2\frac{3}{4} \times 2''$ *whose minor axis is parallel to* X Y. *The line joining the centres of the two ellipses is* $3''$ *long and is parallel to* X Y. *The plan and elevation of the axis of the first cylinder each make* 45° *with* X Y. *The plan of the axis of the second cylinder is perpendicular to the plan of the axis of the first, and its elevation makes* 55° *with* X Y. *To draw the projections of the intersection of the two cylinders.*

In this example the planes which will intersect the cylinders in straight lines will be inclined to both planes of projection.

To find the directions of the traces of the cutting planes take a point pp' in the axis $r\,s$, $r's'$ of one cylinder. Through this point draw the line $p\ q$, $p'\ q'$ parallel to the axis of the other cylinder, and find its horizontal trace q. Then

r being the horizontal trace of $r\ s$, $r's'$, the line through q and r will be the horizontal trace of a plane parallel to the axis of each cylinder. This horizontal trace cuts the hori-

FIG. 152.

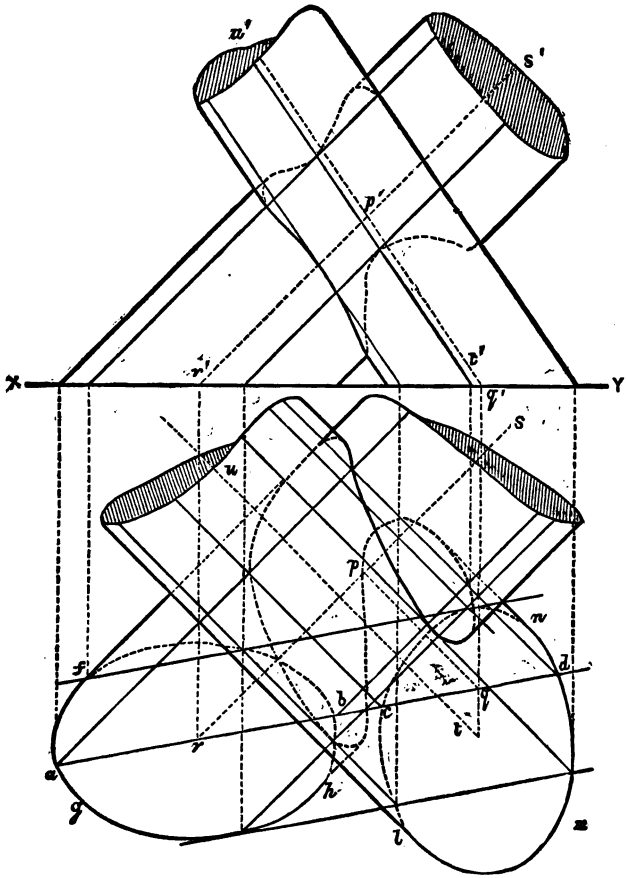

zontal trace of one cylinder at the points a and b, and the horizontal trace of the other at the points c and d. These four points will be the horizontal traces, and lines through

a and *b* parallel to *r s* and through *c* and *d* parallel to *t u* will be the plans of the lines in which the cylinders are cut by the plane of which the line *q r* is the horizontal trace. The points where these lines intersect determines four points in the plan of the intersection of the cylinders.

In like manner by drawing lines parallel to *r q*, assuming these to be the horizontal traces of cutting planes parallel to the first, and drawing lines parallel to *r s* and *t u* through the points where these horizontal traces meet the ellipses, other points in the plan of the intersection can be found.[1]

To find the elevation draw perpendiculars to X Y from the points where the horizontal traces of the cutting planes meet the ellipses, and through the points where these perpendiculars meet X Y draw lines parallel to $r's'$ and $t'u'$. These will be the elevations of the lines in which the planes cut the cylinders. The elevation required is determined by the intersection of these elevations.

As in the preceding examples, all the lines and planes should be numbered; all lines in the same cutting plane having the same number. The student will notice that *the points in the curve of intersection are found from the intersection of those lines having the same number.*

The portion of the curve which is seen in plan, and which must therefore be put in as a full line, is found from the intersection of those lines which lie on the upper surface of one cylinder with those which lie on the upper surface of the other, *i.e.* from the intersection of the lines whose horizontal traces lie on the part *f g h* of one ellipse with those whose horizontal traces lie on the part *l m n* of the other ellipse. All the rest of the curve in the plan will be hid by one or other of the cylinders, and will therefore be dotted.

In like manner the part of the curve which is seen in elevation is found from the intersection of those lines which lie on the front of one cylinder with those which lie on the

[1] In the figure only three cutting planes are shown to avoid confusing the figure (which is drawn half size), but the student in working the problem should take, say ten. A similar remark applies to other figures in this chapter.

front of the other, *i.e.* from the intersection of the lines whose horizontal traces lie on those halves of the ellipses which are furthest from X Y and lie between the tangents which are perpendicular to X Y.

Instead of using only the horizontal traces of the cutting planes the vertical traces may be employed, and when both cylinders do not have a trace on the same plane of projection it is necessary to use both the horizontal and vertical traces of these planes.

PROBLEM 137.

To draw the projections of the intersection of a cylinder and cone.

The general method of solving this problem is to cut the surfaces by planes parallel to the axis or to the generating lines of the cylinder and passing through the apex of the cone. These planes will intersect the surface of the cylinder in parallel straight lines, and the surface of the cone in straight lines passing through its apex. The intersection of the former lines with the latter determines points in the intersection of the cylinder and cone.

EXAMPLE 1. *A right cone—base 3″ diameter, axis 3¼″ long—has its base horizontal. A cylinder, 2″ in diameter, whose axis is horizontal penetrates the cone. The axis of the cylinder is 1¼″ above the base of the cone. The axes of the solids are ¼″ apart. To show the plan of the intersection of the solids and an elevation on a vertical plane inclined at 30° to the axis of the cylinder.*

The general method which has just been explained can easily be applied to the solution of this example. But in this case the positions of the solids in relation to the horizontal plane and to one another are such that another method may be used which is as simple as that just explained. This method, which is illustrated by fig. 153, is as follows.

As the axis of the cone is vertical and the axis of the cylinder horizontal, all horizontal planes which meet the solids will intersect the cylinder in straight lines and the

cone in circles. The intersection of these circles with the straight lines will determine points on the curve of intersection required.

Take an elevation of the cylinder and cone on a plane perpendicular to the axis of the cylinder. In the figure this elevation is shown brought round into the plane of the first elevation.

FIG. 153.

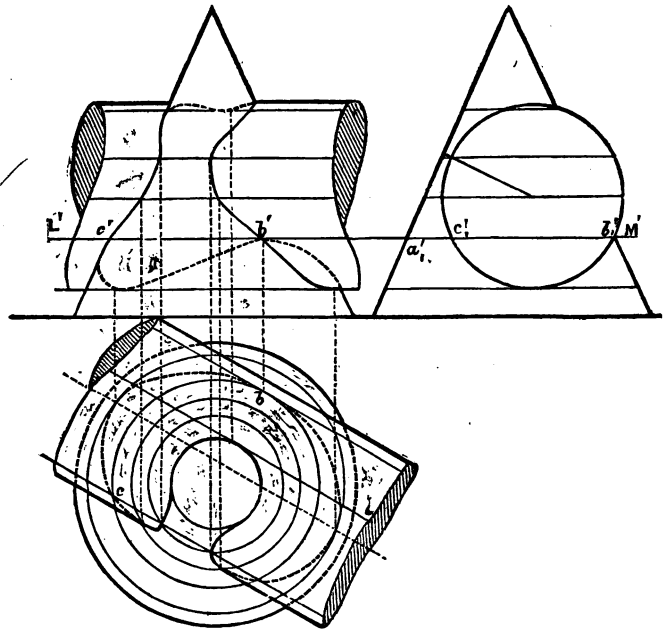

Now draw the vertical traces of the horizontal cutting planes and consider one of these planes—say that which has L′M′ for its vertical trace. This plane will intersect the cone in a circle of which the diameter is $a_1'b_1'$. Draw, therefore, a circle of this diameter on the plan of the cone concentric with the plan of its base. This same horizontal plane will intersect the surface of the cylinder in two straight lines, of

which the points $b_1'c_1'$ will be the end elevations. The plans of these lines will be parallel to the plan of the axis of the cylinder, and at distances from it equal to half of $b_1'c_1'$. The points b and c, where these lines meet the circle already drawn, will be the plans of two points on the curve of intersection, and perpendiculars from b and c to X Y, to meet L/M′ at b' and c', determine the elevations of these points.

In like manner any number of points on the curve of intersection may be found, and a fair curve through these will be the complete intersection.

In the figure the construction is shown for finding the most important points in the intersection—that is, all the points of the curve where there is a rapid change in its direction.

EXAMPLE 2. *The horizontal trace of a cylinder is an ellipse,* $3'' \times 2''$ *whose major axis is parallel to* X Y. *The plan of the axis of the cylinder makes* 30° *and its elevation* 60° *with* X Y. *A cone has for its horizontal trace an ellipse* $3\frac{1}{4}'' \times 2''$ *whose centre is* $3''$ *from the centre of the horizontal trace of the cylinder, and in the same line with it parallel to* X Y, *and whose major axis is inclined at* 60° *to* X Y. *The vertex of the cone is* $5''$ *above the horizontal plane, and its plan is* $2\frac{1}{2}''$ *from the centre of the first ellipse and* $3\frac{1}{2}''$ *from that of the second. To determine the intersection of the cylinder and cone.*

This example is worked by cutting the surfaces by planes passing through the vertex of the cone, and parallel to the generating lines of the cylinder which, as already stated, is the general method of solving this problem.

It is evident that all planes which are parallel to the generating lines of the cylinder and pass through $v\,v'$, the vertex of the cone, will contain a line $v\,t$, $v't'$ drawn through $v\,v'$ parallel to these generating lines. Hence the horizontal traces of all the cutting planes will pass through t, the horizontal trace of the line $v\,t$, $v't'$.

The line $h\,t$, meeting the horizontal trace of the cone at h and l, and the horizontal trace of the cylinder at m and n, is the horizontal trace of one of the cutting planes. This plane

will intersect the surface of the cone in two straight lines of which $v\,h$ and $v\,l$ are the plans, and $v'h'$ and $v'l'$ the ele-

FIG. 154.

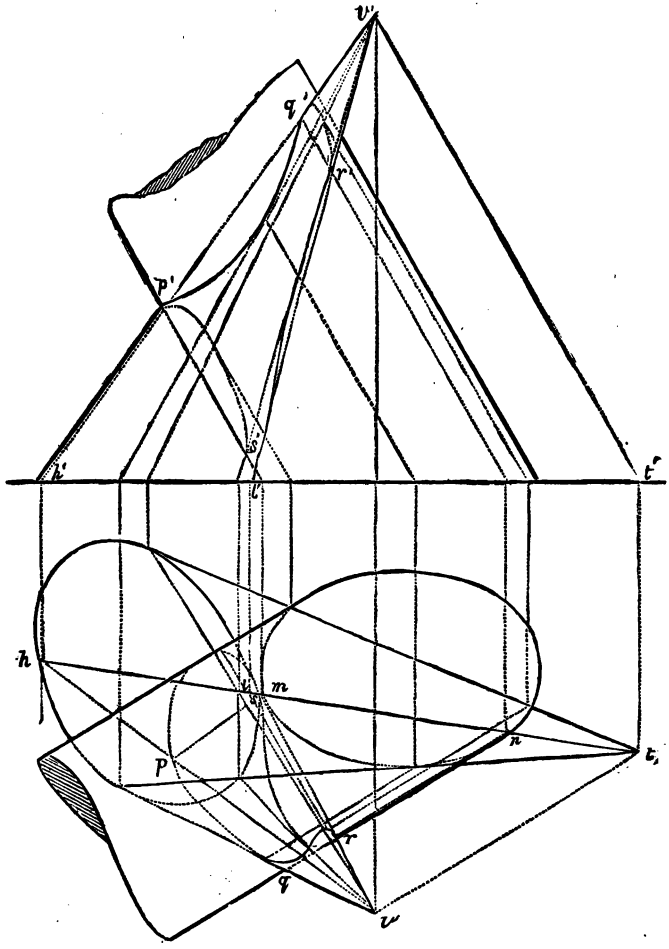

vations. The same plane will intersect the surface of the cylinder in two straight lines whose plans pass through m

and n and are parallel to the plans of the generating lines of the cylinder, and whose elevations are parallel to the elevations of these lines as shown in the figure.

The points $p\,p'$, $q\,q'$, $r\,r'$, $s\,s'$, determined by the intersection of these four lines, are points on the curve of intersection required.

In like manner any number of points may be determined and the curve drawn as in former problems.

In the figure only three cutting planes are shown, but the student will, of course, in working the problem take a larger number.

PROBLEM 138.

To determine the intersection of two cones.

The student will have no difficulty with this problem if he has rightly understood the preceding ones of this chapter. In this case the cutting planes are made to contain the vertex of each cone; therefore they will all contain the line joining these vertices. Hence the horizontal traces of all the cutting planes will pass through the horizontal trace of the line joining the vertices of the cones.

PROBLEM 139.

To determine the intersection of a sphere with a prism or pyramid.

The surface of a prism or pyramid is made up of plane faces, and the intersections of these faces with the surface of the sphere may be determined by Problem 114. These intersections will be portions of circles (whose projections are generally ellipses) meeting one another at the points where the edges of the prism or pyramid meet the surface of the sphere. These latter points should be determined separately by Problem 66.

PROBLEM 140.

To determine the intersection of a cylinder and a surface of revolution.

In all the problems which we have yet considered on the intersection of surfaces, we have cut them by planes in order to find points on the line of intersection. Now, the only simple plane section of a surface of revolution is in general one at right angles to its axis, which will always be a circle; but it is evident that only in very particular cases would the plane which cuts the surface of revolution in a circle, cut the surface of the cylinder in a circle or in straight lines. For instance, the plane which cuts the surface of revolution in a circle might intersect the cylinder in an ellipse, and it would clearly be a laborious process to construct an ellipse for each cutting plane. Plane sections are, therefore, in general not suitable for the working of this problem.

Instead of cutting the surfaces by planes we cut them by cylinders, whose generating lines are parallel to those of the given cylinder, and which have circular sections of the surface of revolution for directrices. These cylinders may be said to cut the surface of revolution in circles, and they will cut the given cylinder in straight lines, the intersection of which with the circles will determine points on the required intersection.

In order that the circular sections of the surface of revolution may be projected into circles and straight lines the axis of revolution must be arranged perpendicular to one of the co-ordinate planes (generally the horizontal plane).

EXAMPLE. *An oblate spheroid—axis 2″, diameter 3″—having its axis vertical, is penetrated by a cylinder 2″ in diameter. The elevation of the axis of the cylinder passes through the centre of the ellipse which is the elevation of the spheroid, and makes 45° with* X Y. *The plan of the axis of the cylinder is ¼″ distant from the centre of the circle which is the plan of the spheroid,*

and makes 30° *with* X Y. *To draw the projections of the intersection of these two solids.*

The ellipse which is the horizontal trace of the cylinder may be determined as in Problem 112, p. 47.

FIG. 155.

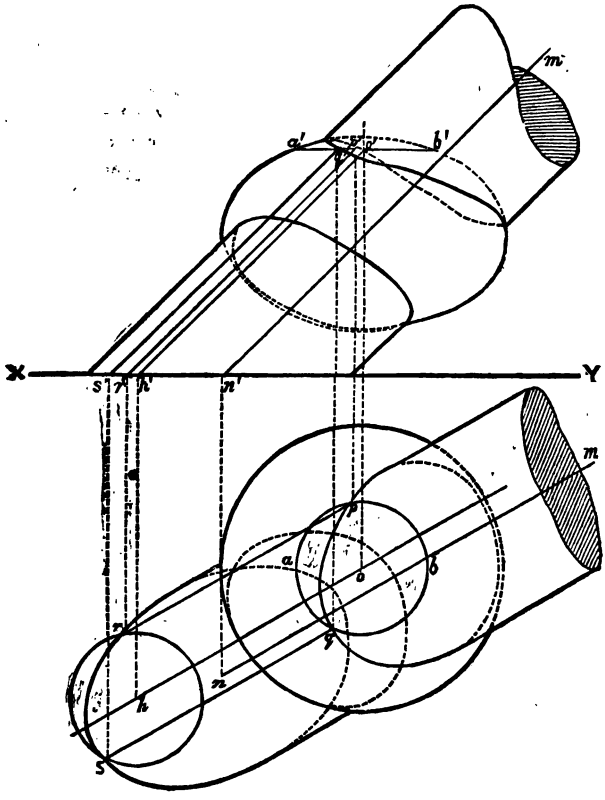

Take any circular section, $a\,b$, $a'b'$, of the spheroid, and imagine a line to move so as to always meet this circle and be parallel to the axis $m\,n$, $m'n'$ of the given cylinder. This moving line will describe the surface of a cylinder every horizontal section of which will be a circle equal to $a\,b$, $a'b'$.

The axis $h\,o$, $h'o'$ of this auxiliary cylinder will be parallel to $m\,n$, $m'n'$, and a circle with the horizontal trace of $h\,o$, $h'o'$ for centre and a diameter equal to that of $a\,b$, $a'b'$ will be the horizontal trace of this cylinder.

The points r and s in which the horizontal trace of the auxiliary cylinder meet the horizontal trace of the given cylinder are evidently the horizontal traces of the lines of intersection of these two cylinders.

The plans $p\,r$ and $q\,s$ of these lines will be parallel to $m\,n$, and their elevations $p'r'$ and $q's'$ will be parallel to $m'n'$.

The points p and q, where the lines $p\,r$ and $q\,s$ meet the circle $a\,b$, are the plans of points on the intersection required, and the points $p'q'$, where the elevations of these lines meet $a'\,b'$, are the elevations of the same points.

But the student will observe that the lines $p\,r$ and $q\,s$ each meet the circle $a\,b$ in two points. The question, therefore, arises, are all the four points thus obtained points on the intersection required? and, if not, which ones must we take?

The answers to these questions will appear from the following considerations. One half of each of the circles A B and R S lies on the under and the other half on the upper surface of the auxiliary cylinder. The plans of these halves will be found by drawing through h and o diameters perpendicular to $o\,h$. The semicircles to the right of h and o will be the plans of those halves of the circles which are on the under surface of the auxiliary cylinder, while those to the left of h and o will be the plans of those halves of the circles which are on the upper half of the same cylinder. From this we see that the point S and the line Q S are on the upper half of the auxiliary cylinder, therefore the point q must lie on the semicircle to the left of o, and it is evident that the line Q S can only meet the circle A B at one point, because the line and the circle are not in the same plane. Reasoning in the same way, we find that p lies on the semicircle to the right of o.

By taking other auxiliary cylinders and proceeding in the same way we may determine any number of points on the intersection required.

PROBLEM 141.

To determine the intersection of a cone and a surface of revolution.

The solution of this problem is very like that of the preceding one. As before we will assume that the axis of the surface of revolution is vertical. In this case the auxiliary surfaces are cones whose vertices coincide with the vertex of the given cone, and whose directrices are circular sections of the surface of revolution. The horizontal traces of these cones will be circles whose centres will all lie on the straight line passing through the plan of the vertex of the cone and the centre of the plan of the surface of revolution. These circles will not have the same diameters as the circles on the surface of revolution which are the directrices of the cones; their diameters are, however, easily found by taking elevations of the cones on a vertical plane parallel to their axis (which, of course, all lie in the same plane with the vertex of the given cone and the axis of the surface of revolution).

PROBLEM 142.

To determine the intersection of two surfaces of revolution when their axes are parallel.

As all sections of a surface of revolution by planes perpendicular to its axis are circles, and since the axis of the given surfaces are parallel, the same plane will, if it cuts both surfaces, cut them in circles the intersection of which with one another determines points on the intersection required.

The surfaces of revolution should be arranged so that their axes are perpendicular to one of the co-ordinate planes. The projections of the circles mentioned above will then be circles and straight lines, which are easily drawn.

PROBLEM 143.

To determine the intersection of two surfaces of revolution when their axes are not parallel, but meet one another.

Let the surfaces be placed so that their axes are parallel to the vertical plane, and one of them perpendicular to the horizontal plane.

Denote the surface whose axis is vertical by M, and the other by N, and the point where their axes meet by O.

Conceive a sphere having its centre at O, and intersecting each of the given surfaces. The intersection of this sphere with M will be a circle, A B, whose plane is horizontal, and whose plan will therefore be a circle, $a\,b$, and elevation a straight line, $a'b'$.

The intersection of the sphere with N will be a circle, C D, whose elevation, $c'd'$, will be a straight line, but whose plan (which need not be drawn) will be an ellipse.

The point where $a'b'$ meets $c'd'$ will clearly be the elevation of the points where the circles A B and C D meet one another, and will therefore be the elevation of two points on the intersection required.

A perpendicular to X Y from the point of intersection of $a'b'$ and $c'd'$, to meet the circle $a\,b$ at p and q, determines the plans of two points on the intersection required.

By taking a sufficient number of spheres, having their centres at O, any number of points on the intersection of the two given surfaces may be determined in the manner just explained.

PROBLEM 144.

To determine the intersection of two surfaces of revolution when their axes are not parallel nor intersecting.

There is no simple solution of this problem. The easiest way is as follows: First, place the surfaces so that their axes are parallel to the vertical plane and the axis of one of them perpendicular to the horizontal plane. Next cut the surfaces by horizontal planes.

The sections of the surface whose axis is vertical by these planes will be horizontal circles, and can therefore be easily shown. The sections of the other surface by the same planes will not be circles or curves, which are easily drawn. The elevations of these latter sections will be easily drawn since they are straight lines, but their plans will have to be found by determining a number of points in them, and drawing fair curves through them.

The intersection of the sections of the two surfaces by these horizontal planes determines points on the intersection required.

In drawing the plans of the sections of the surface whose axis is inclined, only those portions need be shown which it is thought will cut the plans of the corresponding sections of the other surface.

PROBLEM 145.

To determine the intersection of prisms and pyramids with one another.

The surfaces of prisms and pyramids are plane surfaces, and the intersection of these with one another will be straight lines, which may be determined by the rules for the intersection of planes.

Some cases of this problem, although simple enough in theory, are somewhat difficult in practice, owing to the large number of lines which occur, and they can only be correctly done by exercising very great care in the working.

EXAMPLE 1. *A right prism, having for its base an equilateral triangle of* $2\frac{1}{2}''$ *side, has its axis vertical, and one face parallel to the vertical plane. A square prism, side of square* $1\frac{3}{4}''$, *whose axis is horizontal and inclined at* 40° *to the vertical plane, penetrates the first prism so that their axes intersect. One face of the square prism is inclined at* 60° *to the horizontal plane. To show the elevation of the intersection of the two solids.*

Through the points where the plans of the horizontal edges of the square prism meet the sides of the triangle,

which is the plan of the vertical prism, draw perpendiculars to X Y to meet the elevations of these horizontal edges. This will determine a number of points in the intersection. Next determine the points where the edges of the vertical prism meet the faces of the horizontal prism by taking an auxiliary elevation of the solids on a plane perpendicular to the axis of

FIG. 156.

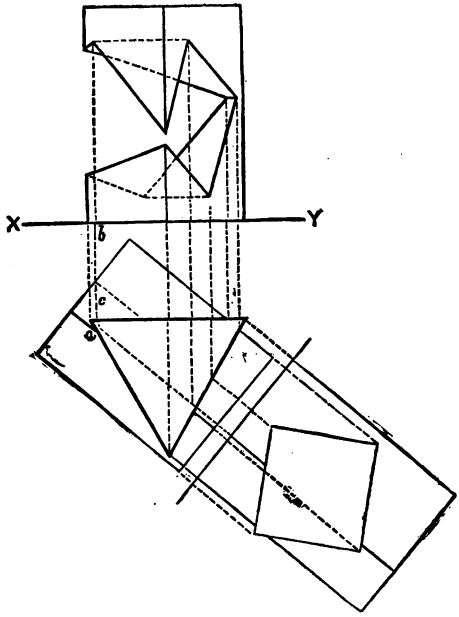

the horizontal prism. This auxiliary elevation is of course required, first of all, for drawing the plan of the horizontal prism. By joining the points thus found in the proper order we get the required intersection. In fig. 156 the elevation of the square prism is not shown.

EXAMPLE 2. *A square pyramid—base* $2\frac{1}{4}''$ *side, axis* $4''$—*stands on the H.P. with one side of its base inclined at* 30° *to* X Y. *This solid is penetrated by a square prism, base* $2''$ *side,*

whose axis is horizontal and inclined at 10° *to the V.P. The lower horizontal edge of the prism cuts the axis of the pyramid at a point* $\frac{1}{4}''$ *above the H.P., and a face containing that edge is inclined at* 40°. *To show the plan and elevation of the solids and their intersection.*

Make an auxiliary elevation on a plane perpendicular to the axis of the prism.

To determine the points of intersection of the edges of the pyramid with the faces of the prism.—The auxiliary elevations of these points will be where the auxiliary elevations of the edges of the pyramid meet the sides of the square, which is the auxiliary elevation of the prism. Perpendiculars from these to the new ground line to meet the plans of the edges of the pyramid determine their plans, from which the elevations can be at once projected.

To determine the intersection of the edges of the prism with the faces of the pyramid, cut both solids by planes containing these edges and the vertex of the pyramid. Find the lines of intersection of these planes with the pyramid. The points where the latter lines meet the edges of the prism are the points required.

Now join the points thus determined in the proper order; that is to say, see that before two points are joined *they both lie on the same face of the prism and also on the same face of the pyramid.*

EXERCISES.

Note.—The student should draw the developments of as many of the surfaces in the following exercises as possible; showing also the development of their lines of intersection.

1. A horizontal cylinder $1\frac{1}{2}''$ in diameter penetrates a vertical cylinder $2''$ in diameter. Show an elevation of their intersection on a plane parallel to their axes: (*a*) when the axes intersect; (*b*) when the axis of the horizontal cylinder is $\frac{3}{8}''$ in front of the axis of the vertical cylinder; (*c*) when

the axis of the horizontal cylinder is $\frac{1}{4}''$ in front of the axis of the vertical cylinder.

2. A cylindrical boiler shell 5 feet in diameter is surmounted by a cylindrical steam dome 3 feet in diameter, the top of the latter being 5 feet 6 inches from the axis of the former. Show an elevation of the intersection of the dome and shell, and obtain the development of the dome. Scale $\frac{1}{24}$th.

3. Draw the elevation of the intersection of a vertical cylinder 3″ in diameter with a cylinder $2\frac{1}{2}''$ in diameter, whose axis is parallel to the vertical plane, but inclined at 45° to the horizontal plane. The axis of the latter cylinder is $\frac{3}{8}''$ in front of the axis of the former.

4. A vertical hollow cylinder—external diameter 3″, thickness ·75″—is penetrated by a horizontal cylinder 1″ in diameter, the distance between their axes being ·6″. Draw an elevation showing their intersection on a vertical plane, making an angle of 30° with the axis of the horizontal cylinder.

5. Two cylinders lying on the ground have the plans of their axes at right angles. The diameter of the one is 2″ and of the other 2·1″. Draw a plan.

6. A cylinder, $2\frac{1}{2}''$ long and $1\frac{1}{2}''$ in diameter, is penetrated by another of the same length, but of only two-thirds its diameter. The axes of both are horizontal and their plans bisect one another at right angles; but the axis of the smaller cylinder is $\frac{1}{4}''$ above that of the larger. Draw the plan and an elevation on a V.P., which makes an angle of 30° with the axis of the larger cylinder.

7. A cylinder $2\frac{3}{4}''$ in diameter, axis vertical, is penetrated by another $2\frac{1}{4}''$ in diameter, having its axis inclined at 45° to the H.P. The axes of the cylinders are $\frac{1}{4}''$ apart. Draw an elevation of their intersection on a ground line inclined at 30° to the plan of the axis of the smaller cylinder.

8. A vertical tube—outside diameter 3″, inside diameter $1\frac{3}{4}''$—has a cylindrical hole bored through it $1\frac{1}{4}''$ in diameter. The axis of the hole is inclined at 45° to the H.P., is $\frac{1}{4}''$ from the axis of the tube, and its plan makes an angle of 25° with X Y. Draw the elevation.

9. A B, C D, and E F are three horizontal straight lines

which are $\frac{1}{2}''$, $1''$, and $1\frac{1}{2}''$ above the H.P. respectively. The plans of A B and C D make angles of 30° with X Y, and the plan of E F is perpendicular to X Y. The plans of the three lines meet at a point. Determine the projections of all the points which are distant $1\frac{1}{4}''$ from each line.

10. Draw a triangle, A B C; A C $= 2\frac{1}{2}''$, angle B A C = angle B C A = 50°. On the same base A C draw a triangle A D C; angle D A C = 55°, angle D C A = 50°. The points B and D to be on opposite sides of A C, which is on the ground line. A B is part of the plan and D C is part of the elevation of the axis of a cylinder, whose horizontal trace is a circle $2''$ in diameter. B C is part of the plan and A D is part of the elevation of the axis of a cylinder, whose horizontal trace is a circle $1\frac{1}{4}''$ in diameter. Draw the projections of the curve of intersection of the two cylinders.

11. The horizontal trace of a cylinder is an ellipse $3'' \times 2''$, whose major axis is inclined at 60° to X Y. The horizontal trace of another cylinder is a circle $2\frac{1}{2}''$ in diameter, whose centre is $3''$ from the centre of the ellipse, and at the same distance from X Y as the latter point. The axis of the first cylinder is inclined at 50° to the horizontal plane, and its plan is in the direction of the major axis of the ellipse. The axis of the second cylinder is inclined at 45° to the horizontal plane, and its plan is at right angles to the plan of the axis of the first cylinder. Show the projections of the intersection of the two cylinders.

12. A cylinder $2\frac{1}{2}''$ in diameter and a cone—base $2\frac{3}{4}''$ diameter, axis $3''$—stand on the H.P. with their axes vertical. The centres of their bases are $1\frac{1}{2}''$ apart, and are in a line inclined at 45° to X Y. Draw the elevation of the two solids, showing the line of intersection of their surfaces.

13. A cone—base $3''$ diameter, axis $2\frac{3}{4}''$—standing on the H.P., is cut by a horizontal cylinder $1\frac{1}{2}''$ in diameter, resting on the H.P. The axis of the cylinder is $\frac{3}{8}''$ in front of the axis of the cone. Draw a plan and elevation showing the intersection of the solids.

14. Draw a line, *a b*, $3\frac{1}{2}''$ long. *a* is the centre of a circle $2\frac{3}{4}''$ in diameter; *b* is the centre of an ellipse $3\frac{3}{4}'' \times 3''$, whose

major axis is in the direction of $a\ b$. The circle is the horizontal trace of a vertical cylinder, and the ellipse is the horizontal trace of a cone, whose vertex has its plan at a distance of 6″ from b and $2\frac{3}{4}''$ from a. The height of the vertex of the cone is $4\frac{1}{2}''$. Draw an elevation on a ground line inclined at 30° to $a\ b$.

15. A cone having a base $2\frac{1}{2}''$ in diameter, and an axis $3\frac{1}{2}''$ long, has the latter inclined at 60° to the H.P. A cylinder $1\frac{3}{4}''$ in diameter penetrates this cone. The axis of the cylinder is horizontal and perpendicular to the axis of the cone, and meets the latter line at a point $2\frac{1}{4}''$ from the vertex of the cone. Draw a plan showing the line of intersection of the surfaces; also an elevation on a ground line inclined at 50° to the plan of the axis of the cone.

16. Draw an ellipse $4'' \times 2\frac{3}{4}''$, v_2c being the minor axis and b its centre. Draw $b\ a$ perpendicular to v_2c, and 3″ long. With centre a describe a circle $2\frac{3}{4}''$ in diameter. Produce $b\ a$ to meet the circle at v_1. The circle is the horizontal trace of a cone, having v_2 for the plan of its vertex. The ellipse is the horizontal trace of a cone having v_1 for the plan of its vertex. The height of V_1 is $2\frac{1}{2}''$ and the height of V_2 is 5″. Show the plan of the intersection of the surfaces, and an elevation on a ground line parallel to $a\ b$.

17. Two lines, $a\ b$, $c\ d$, each 4″ long, intersect at right angles at a point 1″ from a and 1″ from c. These lines are the major axes of two ellipses whose minor axes are each $2\frac{3}{4}''$ long. The ellipses are the horizontal traces of two cones. The cone having the ellipse $c\ d$ for its horizontal trace, has the point b for the plan of its vertex. The other cone has the point d for the plan of its vertex. The altitude of each cone is 4″. Draw the plan of the cones showing their intersection; also an elevation on a ground line parallel to the major axis of one of the ellipses.

18. Draw two circles, 3″ and 4″ diameter, their centres being ·4″ apart. The smaller circle is the plan of a right cone, axis 2·8″ long. The larger circle is the plan of a cone, altitude 1·8″, having the plan of its vertex at a point 1·2″ from the centre of the smaller circle and ·9″ from that of

the larger. Both cones stand on the H.P. Show the intersection of the two cones.

19. Draw a triangle, sides $1\frac{1}{4}''$, $1\frac{3}{4}''$, and $2''$. With the centre of the circumscribing circle and a radius of $1\frac{1}{4}''$ describe a circle. The circle is the plan of a sphere, and the triangle the plan of a vertical slot cut in it. Draw an elevation of the sphere on a ground line parallel to the shortest side of the triangle.

20. The base of a pyramid standing on the H.P. is an equilateral triangle of $2''$ side. The plan of the apex of the pyramid is at the middle point of one side of its base. Altitude $2\frac{3}{4}''$. A sphere, $2''$ diameter, resting on the H.P., has the plan of its centre at the centre of the base of the pyramid. Draw the plan of the solids and an elevation on a ground line, making 70° with that side of the base of the pyramid which contains the plan of its vertex, showing their intersection.

21. A sphere $3''$ diameter stands on the H.P. A square pyramid—side of base $2\frac{1}{2}''$, altitude $4\frac{1}{2}''$—also stands on the H.P. The axis of the pyramid is $\frac{1}{4}''$ from the centre of the sphere. Draw a plan and an elevation on a V.P. parallel to the plane containing the axis of the pyramid and the centre of the sphere, one side of the base of the pyramid being inclined at 30° to X Y.

22. A surface is generated by an ellipse $3'' \times 2''$, rotating about its minor axis, which is vertical. A vertical cylinder has an ellipse $3'' \times 2''$ for its base, which is in the H.P. The centre of the plan of the cylinder coincides with the centre of the circle, which is the plan of the surface of revolution. Draw an elevation showing the intersection of these two surfaces on a ground line, inclined at 40° to the major axis of the plan of the cylinder.

23. In fig. 157, $a\ b$, $a'b'$ are the projections of a surface of revolution. The points $v\ v'$ are the projections of the vertex of a cone, whose horizontal trace is an ellipse $4'' \times 2\frac{3}{4}''$, of which $c\ d$ is the major axis. Show the plan and elevation of the intersection of the two surfaces.

24. A right circular cylinder, $2\frac{1}{2}''$ in diameter, and a right circular cone—base $2\frac{3}{4}''$ diameter, axis $3''$—stand on the

horizontal plane with their axes vertical. The centres of their bases are $1\frac{1}{2}''$ apart, and are in a line inclined at 30° to X Y. Draw the elevation of the two solids, showing the line of intersection of their surfaces.

25. A sphere 3″ diameter is cut by a cylinder $1\frac{1}{2}''$ diameter. The axis of the cylinder (which is vertical) is $\frac{3}{4}''$ from the centre of the sphere. Show an elevation of the sphere on a plane inclined at 30° to the plane containing the axis of the cylinder and the centre of the sphere.

26. A prolate spheroid, a meridian section of which is an ellipse $3\frac{1}{2}'' \times 2\frac{1}{2}''$, has its axis vertical. A second equal spheroid has its axis inclined at 50°, and the upper extremity of that axis coinciding with the upper extremity of the axis

FIG. 157.

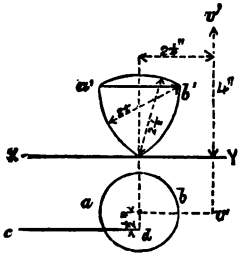

FIG. 158.

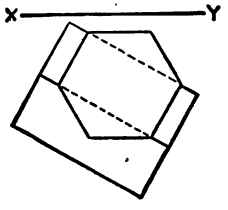

of the first. Draw a plan and an elevation on a plane parallel to the axes of the solids, showing their intersection.

27. Determine the intersection of the solids given in the preceding exercise, when the axis of the second is inclined at 60°, and is moved backwards $\frac{1}{4}''$ from the axis of the first; the upper extremities of the axes remaining at the same height from the horizontal plane.

28. Fig. 158 shows the plan of a horizontal square prism intersecting a vertical hexagonal prism. The side of the hexagon is $1\frac{1}{4}''$. Each prism is 3″ long and the axis of the square prism is $1\frac{1}{2}''$ above the base of the hexagonal prism. Draw an elevation of the solids on X Y, showing their intersection.

29. The plan of a right triangular prism intersecting a

vertical hexagonal prism, standing on the H.P., is given (fig. 159). The ends of the triangular prism are equilateral triangles of $2\frac{1}{2}''$ side, and its axis is inclined at 30° to the H.P. The length of each prism is $4\frac{1}{2}''$. The edge A B is in the H.P.; side of hexagon $1\frac{1}{4}''$. Draw an elevation on X Y.

30. Fig. 160 shows the plan of a horizontal square prism and a pentagonal pyramid. The base of the pyramid and one edge of the prism are on the H.P. Side of pentagon 1·5″; height of pyramid 3″; length of prism 3″. Draw

FIG. 159.

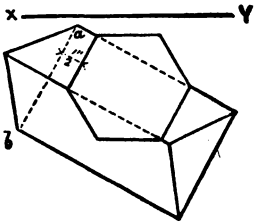

FIG. 160.

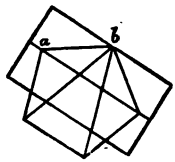

the plan and an elevation on a ground line parallel to *a b*, showing in both projections the intersection of the surfaces of the solids.

31. A solid is formed of two equal right hexagonal pyramids. Bases of pyramids $1\frac{1}{4}''$ side, axes 3″ long. The axes of the pyramids cut each other at right angles at a point $1\frac{3}{4}''$ from the vertex of each pyramid. One pyramid stands with its base on the H.P., and has one side of that base parallel to a horizontal side of the base of the other pyramid. Draw a plan of the solid and an elevation on a V.P., making an angle of 30° with the plane of the axes of the pyramids.

CHAPTER XVII.

PROJECTION OF SHADOWS.

In a homogeneous medium light travels in straight lines, and in this chapter it will always be assumed that the medium through which the light passes is homogeneous.

If an opaque body be placed before a source of light, part of the surface of the former will be illuminated and the remainder left in darkness. Also a portion of the light from the luminous body will be intercepted, and a portion of the space behind the opaque body will be in darkness. This dark space behind the opaque body is called the *shadow* of that body. The surface which bounds the shadow is the *shadow surface*, and the line on the surface of the opaque body which separates the illumined from the unillumined part is the *shade line*.

It is evident that the shadow surface is a ruled surface, and that its directrix is the shade line.

The intersection of the shadow surface with any other surface which it meets is the *cast shadow* of the opaque body on that surface, but generally the cast shadow is called simply the shadow.

The outline of the cast shadow of an opaque body is evidently the cast shadow of its shade line. In general the cast shadow is best determined by first finding the shade line, and then the cast shadow of that line; especially is this the case when the surface upon which the shadow is cast is other than a single plane.

The rays of light may be parallel, or they may diverge from a point or converge to a point. If the light comes from a great distance, as from the sun, the rays are practically parallel. If the light comes from a point, which is practically the case when the luminous body is very small, the rays diverge from that point in all directions. Rays of light may

be made to converge to a point by aid of a reflector or a lens of suitable form.

It will always be assumed that the beam of light is large enough to embrace the whole of the object whose shadow we wish to determine.

PROBLEM 146.

To determine the cast shadow of a point.

Draw the projections of the ray of light which is intercepted by the given point, and determine the point of intersection of the ray with the surface upon which the shadow is cast. This point of intersection is the shadow required.

It is understood that any surface upon which a shadow is cast is an opaque surface. Hence a point can only have one shadow with one system of illumination, and a ray of light which meets one co-ordinate plane cannot meet the other, although the line which represents it may have both a horizontal and a vertical trace.

PROBLEM 147.

To determine the cast shadow of a line, straight or curved.

If the line is a straight line, then, whether the rays of light are parallel or proceed from a point, it is evident that all those which meet the line are in the same plane, so that the shadow cast by the line on any surface will be a portion of the line of intersection of this plane with the surface. The extremities of the cast shadow of the line will be at the cast shadows of its extremities.

If the shadow of the straight line is cast on a single plane, determine the shadows of its extremities by the last problem, and then join them for the required cast shadow.

If the line is a curved line, and the rays of light are parallel, all those rays which meet the line will lie on a cylindrical surface; but if the rays all proceed from a point, those which meet the curved line will lie on a conical surface. The intersection of the fore-mentioned cylindrical or conical

surface with the surface which receives the cast shadow is the cast shadow required.

Generally when the line is curved we determine its cast shadow by finding, by the preceding problem, the cast shadows of a number of points in the line, and then drawing a fair curve through these.

The student should remember the following simple case. The cast shadow of a circle on a plane parallel to the plane of the circle is a circle whose centre is at the cast shadow of the centre of the given circle. The diameter of the circle which forms the cast shadow will be greater than, equal to, or less than the diameter of the given circle according as the rays of light are divergent, parallel, or convergent.

PROBLEM 148.

To determine the cast shadow of a solid having plane faces.

It is evident that one part of a face cannot be in light and another part in shade. Hence the shade line must be made up of the edges of the solid. Those edges which make up the shade line can very often be determined by simple inspection. If there is a doubt as to whether a particular edge is a portion of the shade line or not, draw the projections of a ray of light through any point in it, and determine whether it leaves the faces of which the edge in question is the intersection on the same or on opposite sides. This is done by finding the traces of the faces and also the traces of the line which represents the ray of light. If both traces of the ray fall outside the traces of the faces, then the ray leaves the faces on opposite sides and the edge is a portion of the shade line. But if one or both of the traces of the ray fall within the traces of the faces, the ray leaves the faces on the same side, and the edge is not a portion of the shade line.

Having determined the shade line, its cast shadow, which is the outline of the cast shadow required, can be determined by the preceding problems of this chapter.

Instead of first determining the shade line we might

determine the shadow cast by each edge, and then neglect those which fall within the boundary line of the figure which is obtained.

We might here point out that the cast shadow of an object is the outline of a parallel or conical projection of it, according as the rays of light are parallel, or proceed from or to a point.

PROBLEM 149.

To determine the shadow of a cylinder.

The shade line will consist generally of two straight lines and two curved lines. The straight lines are the lines of contact of the tangent planes to the cylinder, parallel to the rays of light or passing through the luminous point.

Conceive a plane to contain these straight lines. This plane will divide each end of the cylinder into two segments, and the curved boundary line of one of these segments on each end will constitute the curved parts of the shade line. Those segments of the ends which must be taken for the shade line will usually be evident from inspection.

In the particular case where the rays of light diverge from a point within the surface of the cylinder produced, the shade line will be the outline of that end of the cylinder which is nearest to the luminous point.

Having determined the shade line, the shadow cast by the cylinder on any given surface can be determined by Problem 147.

PROBLEM 150.

To determine the shadow of a cone.

The shade line in this case consists generally of two straight lines and one curved line. The straight lines are the lines of contact of the tangent planes to the cone parallel to the rays of light or passing through the luminous point.

A plane containing these straight lines will divide the base of the cone into two segments, and the curved boundary line of one of these will be the curved part of the shade

line. The segment of the base which must be taken for the curved part of the shade line will usually be evident from inspection.

In those cases where tangent planes cannot be determined parallel to the rays, or containing the luminous point, *i.e.* when the line which represents the ray of light which meets the vertex passes inside the surface of the cone, the shade line will simply consist of the whole outline of the base of the cone.

PROBLEM 151.

To determine the shadow of a sphere.

If the rays of light are parallel the shade line will be the line of contact of the enveloping cylinder, whose axis is parallel to the direction of the rays of light. This cylinder is determined by Problem 112, and its intersection with any given surface will be the outline of the cast shadow of the sphere on that surface.

If the rays of light proceed from a point, the shade line will be the line of contact of the enveloping cone whose vertex is at the luminous point. This cone is determined by Problem 113, and its intersection with any given surface determines the cast shadow of the sphere on that surface.

PROBLEM 152.

To determine the shadow of a surface of revolution.

This is just an application of Problem 129 or Problem 130, according as the rays are parallel or divergent.

EXERCISES.

1. A square of 1″ side is horizontal and ½″ above the horizontal plane, one side being in the vertical plane. Show the shadows thrown by this square on the co-ordinate planes. Both projections of the rays of light make 45° with X Y.

2. Draw a square, $a'b'c'd'$, of 1″ side, the lowest side, $a'b'$, being $\frac{1}{2}$″ above X Y. Join $a'c'$. $a'b'c'$ is the elevation of a triangle whose plane is parallel to, and 1″ in front of, the vertical plane. d' is the elevation of a point which is $2\frac{1}{2}$″ in front of the vertical plane. Determine the shadows cast by the triangle A B C on the planes of projection, the rays of light all coming from the point D.

3. The traces of a plane both make 45° with the ground line. A circle 2″ in diameter, whose plane is horizontal and $1\frac{1}{2}$″ above the horizontal plane, touches this inclined plane. Show the plan and elevation of the cast shadow of the circle on the inclined plane, the rays of light being perpendicular to that plane.

4. Determine the shadow cast by a cube of $1\frac{1}{2}$″ edge on the horizontal plane, its base being horizontal and 1″ above the horizontal plane. The rays of light to be parallel to one diagonal of the solid.

5. Determine the shadows cast by the following solids on the horizontal plane; the rays of light being parallel and inclined at 45° to X Y in plan and elevation.

(*a*) A hexagonal prism (edge 1″, axis $1\frac{1}{2}$″), axis vertical, base $\frac{1}{2}$″ above the horizontal plane, and one rectangular face inclined at 10° to the vertical plane.

(*b*) A tetrahedron, edge 1″, base $\frac{3}{4}$″ above the horizontal plane; one side of base parallel to the vertical plane.

6. A tetrahedron, of $1\frac{1}{2}$″ edge, has its three lowest angles 0·4″, 1″, and 1·3″ respectively above the horizontal plane. Show the shadow thrown by it upon that plane, assuming the rays of light to be inclined at 45°, and their plans to make an angle of 45° with the horizontal trace of the plane containing the three given points.

7. A hexagonal prism (base $1\frac{1}{2}$″ side, height $1\frac{1}{2}$″) stands on the horizontal plane, with one face inclined at 15° to the vertical plane. The nearest vertical edge is $\frac{1}{4}$″ from the vertical plane. Show the shadow thrown on the horizontal and vertical planes by rays of light whose projections make 45° with the ground line.

8. Draw two squares of $1\frac{1}{2}$″ side, so that a side of one co-

incides with a side of the other. These squares are the bases of a cube and a right pyramid both standing on the horizontal plane. Altitude of pyramid $2\frac{1}{2}''$. Determine the shadow cast by the pyramid on the cube; also the shadow cast by each on the horizontal plane. The rays of light to be inclined at 45°, and their plans to be parallel to the line joining the centre of one square with one of the farthest-away corners of the other. An elevation to be drawn on a ground line parallel to the plan of a ray of light. In both views the parts of the surfaces of the solids in shade must be shown.

9. Draw two hexagons of $1\frac{1}{2}''$ side, their centres being $3\frac{1}{2}''$ apart and a diameter of each perpendicular to X Y. One hexagon is the base of a right prism, and the other is the base of a right pyramid. Both stand on the ground. Altitude of each solid $4''$. Determine the shadow cast by the prism on the pyramid, and the shadows of both on the ground. The elevations of the rays of light make 60° and their plans 20° with X Y. In both plan and elevation the parts of the surfaces in shade are to be shown.

10. A solid is formed by the junction of a right cone and a right cylinder. Diameter of the base of each $2{\cdot}5''$, axis of cylinder $3''$, of cone $1{\cdot}75''$. Draw plan of solid when the base of the cylinder touches the horizontal plane, and the common axis is inclined at 59°. Add the shadow thrown by rays of light, making in direction an angle of 40° with the plan of the axis and having an inclination of 55°.

11. A right cone, base $2''$ diameter, axis $2{\cdot}5''$, has its base horizontal, and $1''$ above the ground. Determine the cast shadow of this cone on the ground, the rays of light being parallel and inclined at 50°.

12. A cylinder, $2''$ in diameter and $2''$ long, lies on the horizontal plane with its base in the vertical plane. Show the shadow thrown by this solid on each plane of projection by rays of light whose plans and elevations make 45° with the ground line.

13. A right cone, base $3''$ diameter, axis $3{\cdot}5''$, lies with its slant side on the horizontal plane. Determine its shadow when the rays of light forming it are inclined at 43°, and

make in direction an angle of 35° with the plan of the axis. The base of the cone to be in shadow.

14. A cylindrical square-headed bolt has the following dimensions. Diameter of shank 1·7″; length of shank 1·8″; thickness of head ·8″; width of head 2·3″. This bolt stands with its circular end on the ground and one face of the head parallel to the vertical plane. Determine in elevation the shadow cast by the head on the shank, and also that cast by the whole solid on the *horizontal* plane. In plan the rays of light make 23° with the ground line, and in elevation 40°.

15. A cylinder, 1½″ in diameter, lies on the horizontal plane; a cone—base 2·3″ diameter, altitude 3·7″—has its base on the horizontal plane. Show the shadow of the cone thrown on to the cylinder by parallel rays of light inclined at 38° to the horizontal plane, their plans making 68° with the plan of the axis of the cylinder.

16. A right circular cylinder, 1·8″ diameter and 3·5″ long, stands on the horizontal plane. A plane inclined at 56° has its horizontal trace 1″ from the centre of the base of the cylinder. Draw a plan of the shadow cast by the cylinder on the inclined plane, and an elevation of it on a ground line making 52° with the horizontal trace of the plane. The rays of light are parallel and inclined at 55°, and their plans make 40° with the horizontal trace of the plane.

17. A sphere, diameter 2·5″, stands on the horizontal plane. Draw the shadow on that plane projected by rays from a luminous point 2·5″ high, and in plan distant 2·25 from the plan of the centre. Show also the boundary between light and shade on the sphere.

18. A sphere of 2·5″ diameter rests on the horizontal plane. Its shadow, produced by rays of light diverging from a luminous point, is a parabola, the distance between whose focus and vertex is ·75″. Determine the position of the luminous point, and draw a portion of the parabola.

19. Determine the shadow cast on the horizontal plane by the solid of revolution given in Exercise 23, Chapter XVI.; also the outline of the shaded portion of the solid. The rays of light in plan and elevation make 45° with the ground line.

CHAPTER XVIII.

MISCELLANEOUS PROBLEMS.

Trihedral Angles.—The angle formed by three planes meeting at a point is called a *trihedral angle.* The angles between the lines in which the three planes intersect are the sides or faces, and the dihedral angles between the planes are the angles of the trihedral angle. Thus, in fig. 161, the three planes S L M, S M N, and S N L form at S a trihedral angle. The plane angles L S M, M S N, and N S L are the sides of the trihedral angle S, and the dihedral angles between these are its angles.

FIG. 161.

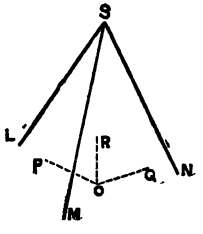

If a sphere be placed with its centre at S, the three planes which form the trihedral angle will intersect the surface of the sphere in three great circles, which will intersect one another and form what is called a *spherical triangle.*

The sides and angles of a spherical triangle are the sides and angles of the trihedral angle which it subtends at the centre of the sphere. Hence the solution of a spherical triangle is just the solution of a trihedral angle.

If from a point, O (fig. 161), perpendiculars O P, O Q, and O R be let fall on the faces S L M, S M N, and S N L of the trihedral angle S, these will be the edges of a trihedral angle, O, which has the remarkable properties that its angles are the supplements of the sides of the angle S, and its sides are the supplements of the angles of the angle S. The trihedral angles O and S are therefore called supplementary. The following notation is used to denote the elements of trihedral angles or of spherical triangles. The three angles are denoted by the capital letters A, B, C, and the three sides by the italic letters *a, b, c, the sides a, b, and c being opposite the angles* A, B, *and*

C *respectively*. The elements of the supplementary trihedral angle are denoted by the same letters accented: thus the angles are A′, B′, C′, and the sides a', b', c'.

The relations between the elements of two trihedral angles which are supplementary may be thus expressed:—

$$\left.\begin{aligned} A' &= 180^\circ - a \\ B' &= 180^\circ - b \\ C' &= 180^\circ - c \end{aligned}\right\} (1) \qquad \left.\begin{aligned} a' &= 180^\circ - A \\ b' &= 180^\circ - B \\ c' &= 180^\circ - C. \end{aligned}\right\} (2)$$

These equations may be put in the form—

$$\left.\begin{aligned} a &= 180^\circ - A' \\ b &= 180^\circ - B' \\ c &= 180^\circ - C' \end{aligned}\right\} (3) \qquad \left.\begin{aligned} A &= 180^\circ - a' \\ B &= 180^\circ - b' \\ C &= 180^\circ - c'. \end{aligned}\right\} (4)$$

Any three of the six elements of a trihedral angle being given, the other three can be found. There are in all six cases to consider: (1) Given the three sides. (2) Given two sides and the angle between them. (3) Given two sides and the angle opposite to one of them. (4) Given the three angles. (5) Given one side and the two adjacent angles. (6) Given one side, an adjacent angle, and an opposite angle.

By means of the properties of the supplementary trihedral angle, cases (4), (5), and (6) may be reduced to cases (1), (2), and (3) respectively. In solving case (4), find by case (1) the angles of the trihedral angle which has its sides equal to the supplements of the given angles, then the supplements of the angles found will be the sides required. Or we may put it briefly thus: Given A, B, and C, find from equations (2) a', b', and c'; next, by case (1) find A′, B′, and C′; then by equations (3) find a, b, and c.

In case (5) suppose a, B, and C given; from equations (1) and (2) find A′, b', and c'; next by case (2) find a', B′, and C′; then by equations (4) and (3) find A, b and c.

In like manner case (6) is reduced to case (3).

In the next three problems cases (1), (2), and (3) are solved.

PROBLEM 153.

Given the three sides of a trihedral angle, to determine the three angles.

Let one of the faces, b, lie on the horizontal plane, and let the other two, a and c, be constructed into that plane, as shown in fig. 162. Make $S L_1 = S L_2$. Draw $L_1 l$ perpendicular to S M, and $L_2 l$ perpendicular to S N to meet the former perpendicular at l. Join S l. The three lines S l, S M, and S N will form the plan of the trihedral angle when the face b is horizontal.

We have here supposed the faces a and c to revolve about the edges S M and S N respectively until the lines $S L_1$ and

FIG. 162.

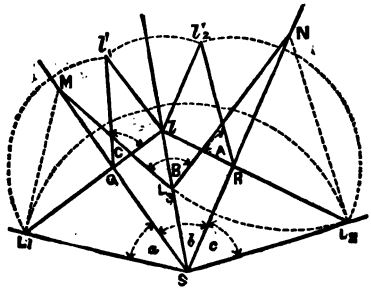

$S L_2$ coincide. It is evident that the point L_1 will describe an arc of a circle whose plan is the straight line $L_1 l$; also the point L_2 will describe an arc whose plan is $L_2 l$; and since L_1 and L_2 are equidistant from S, l will be the plan of the point where they meet, and S l the plan of the edge between the faces a and c.

To determine the angles A and C, draw $l l_1'$ perpendicular to $L_1 l$, and $l l_2'$ perpendicular to $L_2 l$. With Q as centre, and $Q L_1$ as radius, describe an arc to cut $l l_1'$ at l_1', and with R as centre, and $R L_2$ as radius, describe an arc to cut $l l_2'$ at l_2'; join l_1'Q and l_2'R. l_1'Q l is the angle C, and l_2'R l the angle

A. It is evident that when the face a is brought into its natural position, the line L_1Q in that face will remain perpendicular to S M; also the line l Q in the face b is perpendicular to S M; therefore the angle $l_1'Q\,l$, which is the angle between these lines, will measure the angle between the faces a and b; that is, the angle C. In like manner the angle $l_2'R\,l$ is the angle A.

To find the angle B, draw L_1M perpendicular to S L_1, and L_2N perpendicular to S L_2. With centre N, and radius N L_2, describe an arc to cut S l at L_3; join L_3 to M and N. M L_3N is equal to the angle B. It is evident that, when the faces a and c are brought into their natural positions, the lines L_1M and L_2N lying in these faces will be perpendicular to their line of intersection, and therefore the angle between them, which is equal to the angle M L_3N, will be equal to the angle B.

PROBLEM 154.

Given two sides of a trihedral angle, and the angle between them, to determine the third side and the other angles.

Let a and b be the given sides or faces, and C the angle between them.

Construct the faces a and b on the horizontal plane, as shown in fig. 163. Draw L_1l perpendicular to S M at Q; make the angle $l_1'Q\,l$ equal to C. Make Q l_1' = Q L_1, and draw $l_1'l$ perpendicular to L_1l to meet the latter at l. Join S l. The lines S l, S M, and S N form the plan of the trihedral angle when the face b is horizontal.

FIG. 163.

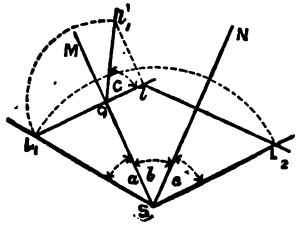

To determine the face c, draw l L_2 perpendicular to S N. With centre S, and radius S L_1, describe an arc to cut l L_2 at L_2. L_2S N is the third face, c.

The angles A and B are determined exactly as in the preceding problem.

After the explanation which has been given of the preceding problem, the student will have no difficulty in understanding the theory of this one.

PROBLEM 155.

Given two sides of a trihedral angle, and the angle opposite to one of them, to determine the third side and the other angles.

Let a and b be the given faces, and A the given angle.

As before, construct the given faces on the horizontal plane.

Take a ground line, X Y, perpendicular to S M. From M draw M R perpendicular to S N. With M as centre, and M R as radius, describe the arc R R_2 to meet X Y at R_2. Make

FIG. 164.

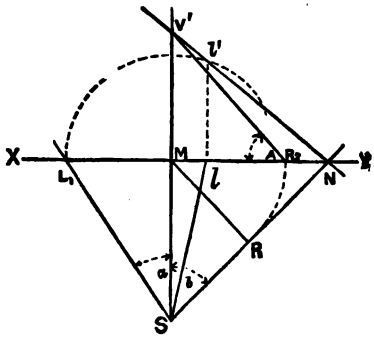

the angle M R_2 V′ equal to the angle A. V′N will be the vertical trace of the face c, S N being its horizontal trace. Now let the face a revolve about S M. Since S M is perpendicular to X Y, the elevation of the circle described by L_1 will be a circle having a radius equal to M L_1, with M as centre. Let this circle cut V′N at l'. The line l'M will be the vertical trace of the face a when it is in its natural

position, and S M is its horizontal trace; therefore, if a perpendicular be let fall from l' to X Y to meet the latter at l, the line l S will be the plan of the intersection of the faces a and c. Hence the lines S l, S M, and S N form the plan of the trihedral angle when the face b is horizontal. The third face c is determined as in the preceding problem. The angles B and C are found as in Problem 153.

As the arc $L_1 l'$ will generally meet the line V′N at two points, there are generally two solutions for this problem. It is therefore called the ambiguous case.

Solids inscribed in the sphere.—A solid is said to be inscribed in a sphere when all its angular points are on the surface of the sphere.

In fig. 165 are shown constructions for finding the length of an edge of each of the five regular solids when inscribed in a sphere of given diameter.

FIG. 165.

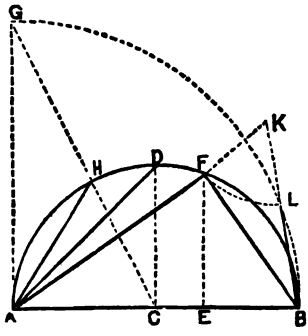

A B is the diameter of the sphere. On this a semicircle is described.

Take A E = $\frac{2}{3}$rds of A B, and therefore B E = $\frac{1}{3}$rd of A B; draw E F perpendicular to A B to meet the circle at F; join A F and B F. A F is the edge of the inscribed tetrahedron, and B F is the edge of the inscribed cube.

C being the middle point of A B, draw C D perpendicular to A B to meet the circle at D; join A D. A D is the edge of the inscribed octahedron.

Draw A G at right angles to A B, and equal to A B; draw C G cutting the circle at H; join A H. A H is the edge of the inscribed icosahedron.

Draw F K perpendicular to B F, and equal to half of B F; join B K, and make K L = K F. B L is the edge of the inscribed dodecahedron.

The following facts should be remembered.

The plane containing one edge of a tetrahedron and the centre of the circumscribing sphere bisects the opposite edge at right angles.

A rectangle which has for its diagonals two of the diagonals of a cube is inscribed in a great circle of the circumscribing sphere.

The octahedron can be broken up into two square pyramids in three different ways, and if this solid is inscribed in a sphere, the square bases of all these pyramids will be inscribed in great circles of the sphere.

Solids circumscribing the sphere. A solid is said to circumscribe a sphere, or a sphere to be inscribed in a solid, when the faces of the solid are all tangential to the surface of the sphere.

A plane bisecting the angle between any two faces of the solid passes through the centre of the sphere.

In the case of the five regular solids, the centres of the inscribed and circumscribing spheres coincide

The cylinder, cone, and sphere in contact. If two cylinders or two cones, or a cylinder and a cone, touch one another, they will do so either along a straight line or at a point. If the cylinders and cones are surfaces of revolution, and touch one another along a straight line, the line of contact and the axis of the surfaces are in the same plane. When two cylinders touch one another at a point the common perpendicular to their axes passes through the point of contact.

If a sphere touch a cylinder or cone, it will do so at a point, and if the cylinder or cone be a surface of revolution, the centre of the sphere, the point of contact, and the axis of the cylinder or cone are in the same plane.

If two spheres touch one another, the point of contact and the centres of the spheres are in the same straight line.

PROBLEM 156.

To draw the projections of four spheres, each one touching the other three, and three of them resting on the horizontal plane.

Denote the spheres or their centres by A, B, C, and D, the first three spheres being on the horizontal plane. Let their radii be r_1, r_2, r_3, and r_4 respectively.

1st. To determine the projections of the three spheres resting on the horizontal plane.

If the centres of the spheres A, B, and C be joined, a triangle is formed whose sides are equal to the sum of the radii of the spheres taken two at a time; that is, the sides will be equal to $r_1 + r_2$, $r_2 + r_3$, and $r_3 + r_1$. The angular points of this triangle will be at a distance from the horizontal plane equal to the radii of the spheres; that is, equal to r_1, r_2, and r_3. Hence the projections of this triangle can be determined by Problem 74. Then, having got the projections of the centres, the projections of the spheres can at once be drawn.

We may also proceed as follows. Draw first the projections of the sphere A, a, a' being the projections of its centre. The distance between the centres of A and B is equal to the sum of their radii; the height of the centre of A is known as also that of B; it is therefore a simple problem to determine the length of the plan of the line joining the centres of A and B. Hence the projections of the centre of B can be drawn; let them be b, b'. If the projections of the centre of C are c, c', we can in like manner determine the length of $a\,c$, also the length of $b\,c$; therefore, if with centre a and radius $a\,c$ an arc be described, and with centre b and radius $b\,c$ another arc be described to cut the former arc at c, the plan of the centre of C is determined. Hence the projections of the spheres A, B, and C can be drawn.

2nd. To determine the projections of the fourth sphere.

The centre D of the fourth sphere will be at a distance $r_1 + r_4$ from the centre A of the first sphere, and at a distance $r_2 + r_4$ from the centre B of the second sphere. Conceive the

triangle A B D to rotate about the side A B, which remains fixed; the point D would describe a circle which would be the locus of the centres of all the spheres, which would touch the surfaces of the spheres A and B, and have radii equal to r_4. Draw the plan of this circle, which will generally be an ellipse. To determine the axes of this ellipse, take an auxiliary elevation of the spheres A and B on a vertical plane containing their centres; let $a_1'b_1'$ be the auxiliary elevations of these centres. On $a_1'b_1'$ construct a triangle, $a_1'b_1'd_2'$, in which $a_1'd_2'=r_1+r_4$, and $b_1'd_2'=r_2+r_4$. Draw $d_2'p'$ perpendicular to $a_1'b_1'$, meeting the latter at p_1'. Draw $p_1'p$ perpendicular to $a\,b$ to meet the latter at p. p is the plan of the centre of the circle, and is therefore the centre of the ellipse. Through p draw the major axis of the ellipse at right angles to $a\,b$, and equal to twice $d_2'p_1'$. Draw $d_2'd_2$ perpendicular to $a\,b$, to meet the latter at d_2. pd_2 is the semi minor-axis.

In like manner the plan of a circle is determined which is the locus of the centres of all spheres equal to the sphere D, and which touch the spheres A and C.

The two circles whose plans are thus determined will intersect at two points, one on each side of the plane containing the centres of the spheres A, B, and C. The plans of these points are determined by the intersection of the ellipses, which are the plans of the circles, and their distances from the horizontal plane can be found by aid of one of the auxiliary elevations.

That the circles which we have been considering cannot cross one another without intersecting is evident when we consider that each lies on the surface of a sphere whose centre is at A and radius equal to A D.

EXERCISES.

Solve the trihedral angles given in Exercises 1 to 10 inclusive.

1. $a = 65°$; $b = 50°$; $c = 40°$.
2. $a = 75°$; $b = 90°$; $c = 80°$.
3. $a = 40°$; $b = 58°$; $C = 90°$.

4. $a = 70°$; $b = 50°$; $C = 120°$.
5. $a = 50°$; $b = 80°$; $C = 45°$.
6. $a = 50°$; $b = 70°$; $A = 45°$.
7. $a = 120°$; $b = 65°$; $A = 100°$.
8. $A = 120°$; $B = 45°$; $C = 40°$.
9. $a = 100°$; $B = 120°$; $C = 125°$.
10. $a = 60$; $A = 70°$; $C = 100°$.

11. Draw the plan of a cube, inscribed in a sphere of 3″ diameter, resting on the horizontal plane. One angle of the cube to be at a height of 2·75″ above the horizontal plane.

12. Draw a circle $3\frac{1}{2}''$ in diameter, and take a point, a, $1\frac{1}{4}''$ from its centre; through a draw a line, $a\,b$, making an angle of 60° with the diameter of the circle passing through a. The circle is the plan of a sphere; a is the plan of one angular point of a cube, and $a\,b$ the indefinite plan of an edge of the cube. The cube being inscribed in the sphere, complete its plan.

13. Referring to the preceding exercise, take $a\,b$ as the indefinite plan of an edge of an octahedron, a being the plan of one angular point, and complete the plan of the octahedron, supposing it to be inscribed in the sphere.

14. Referring to Exercise 12, take a as the plan of one angular point, and $a\,b$ as the indefinite plan of an edge of a tetrahedron inscribed in the sphere, and complete its plan.

15. Determine the edge of a tetrahedron circumscribing a sphere of 2·5″ diameter.

16. V A B C is a right triangular pyramid. The base A B C has A B = 2·5″, B C = 2·75″, A C = 2″. Altitude = 2·5″. Determine radius of inscribed sphere.

17. A cylinder, $1\frac{3}{4}'$ diameter, lies on the horizontal plane. A point which is 2·5″ above the horizontal plane has its plan $1\frac{1}{2}''$ from the plan of the axis of the cylinder. Draw the plan of a sphere which, having the given point for its centre, touches the cylinder, and mark the point of contact.

18. The axes of two equal cylindrical surfaces are inclined in opposite directions at 25° and 50°; the line perpendicular

to both these axes is 3″ long, and inclined at 35°. Draw the plan of the cylinders, showing the point of contact.

19. Two lines, $a\ b$ and $c\ d$, bisect each other at an angle of 85°. $a\ b$ is 4″, and $c\ d$ $3\frac{1}{2}$″ long. These lines are the plans of the axes of two equal cylinders which touch one another. The heights of the points A, B, C, D, are ·7″, 2·8″, 3·4″, 4·5″ respectively. Draw the plans of the cylinders. You need not show the ends.

20. Make an elevation of a pile of four round shot, 6″ in diameter, three of them forming the base, and touching one another, and the fourth resting upon them. (Scale $\frac{1}{4}$.)

21. Three spheres, whose radii are ·4″, ·7″, and 1·5″ respectively, stand on the ground, each one touching the other two. Draw the plan of them.

22. Draw three spheres touching one another, radii being ·25″, ·5″, ·75 respectively, and determine a fourth sphere, radius ·6″, to touch all three. The three may be supposed to rest on the ground.

23. Draw a triangle, $a\ b\ c$ ($a\ b = 2{\cdot}6''$, $b\ c = 1{\cdot}6''$, $c\ a = 2{\cdot}7''$). A right cone is lying on its side upon the horizontal plane, b is its vertex, and $a\ b$ is the plan of its axis, which is inclined at 25°. The point c is the plan of the centre of a sphere, which also rests upon the horizontal plane, and which is in contact with the cone. Complete the plan.

24. The plans of three points form a triangle, $a\ b\ c$; $a\ b = 3\frac{1}{4}''$, $b\ c = 2\frac{1}{4}''$, $c\ a = 2\frac{3}{4}''$. The heights of the points A, B, and C are $1\frac{1}{2}''$, 4″, and $2\frac{1}{2}''$ respectively. C is the centre of a sphere $2\frac{1}{4}''$ diameter, and A B is the axis of a cone which touches the sphere. Draw the plan of the cone, and show the point of contact.

25. Explain in words how you would determine a line to touch two given spheres, and have a given inclination. Next explain how you would determine a cylinder to touch two given spheres, and have its axis inclined at a given angle.

CHAPTER XIX.

THEORY OF PERSPECTIVE.

THE difference between *perspective, conical* or *radial* projection, and *orthographic* projection is that, instead of the projectors being all perpendicular to the plane of projection, they converge to a point.

The perspective projection of an object represents it as it would actually appear to the eye of an observer when placed at the point to which all the projectors converge.

The plane of projection may be situated anywhere provided it meets all the projectors, but it is generally assumed to be placed in a vertical position between the eye of the observer and the object, and perpendicular to the direction in which the observer is looking.

Picture Plane. The plane of projection is called the *picture plane.*

Station Point. The point to which all the projectors converge is called the *station point.*

Method of drawing a perspective projection. One method of drawing the perspective of an object is as follows:—First, draw the orthographic projections of the object, station point, and picture plane, so that the latter is perpendicular to the ground line X Y, as shown in fig. 166, which shows the method applied to a square prism resting on the ground.

Draw the plans and elevations of the conical projectors V A, V B, &c. From V draw V C perpendicular to the picture plane.

Take any convenient part of the paper upon which to draw the perspective. Mark a point, C, and draw the horizontal line H C, and the vertical line C P. Find a point, A′, so that its distance from H C is equal to $c'a'$, and its distance from C P equal to ca. A′ will be the perspective projection of the point A. In the same way find the perspective B′ of B. A′B′ is the perspective of the line A B. In like manner the perspective projection of all the lines of the object may be determined.

Centre of Vision. The point C, the foot of the perpendicular from the station point to the picture plane, is called the *centre of vision.* It will be observed that the centre of vision is the orthographic projection of the station point on the picture plane.

Horizontal Line. The horizontal line, drawn on the picture plane, through the centre of vision, is called the *horizontal line.*

FIG. 166.

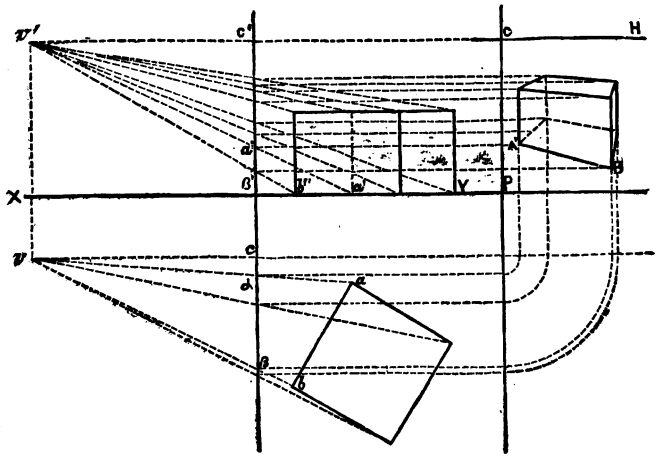

Ground Line. The intersection of the picture plane with the ground is called the *ground line, picture line,* or *base line.*

Vertical Plane. The plane perpendicular to the ground, and containing the station point and centre of vision, is called the *vertical plane.*

Vertical Line. The line of intersection of the vertical and picture planes is called the *vertical line.*

The method illustrated in fig. 166 can be very much abbreviated by an application of the principles explained in the remainder of this chapter.

If V *is the station point,* C *the centre of vision,* P *a given point, p' its orthographic projection on the picture plane, and* P' *its perspective, then* C P' : P'*p'* :: C V : P *p'*.

For C V and P p' are each at right angles to the picture plane M N (fig. 167), and are therefore parallel to one another. The points V C p' and P are in one plane, and V P′P is a straight line; therefore P′ is in the same plane with the points V C p' and P. But C P′ and p' are in the picture plane; therefore C P′p' is a straight line.

FIG. 167.

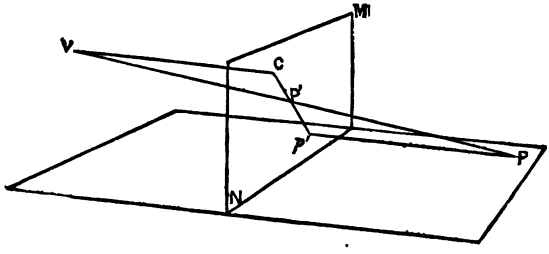

Comparing the two triangles V C P′, P′p'P, the angle V C P′ is equal to the angle P p'P′, each being a right angle; also the angle C P′V is equal to the angle p'P′P, and the angle p'P P′ is equal to the angle C V P′; therefore the two triangles are similar, and C P′ : P′p' :: C V : P p'.

To find the perspective of a point.

Let C be the centre of vision, p' the orthographic projection of the point on the picture plane. On the horizontal line C H make C D equal to the distance of the station point from the picture plane. Draw p'K parallel to C H, and make p'K equal to the distance of the point P from the picture plane. Join D K and p'C. The point P′ where those lines intersect is the perspective of the point P. For, comparing figs. 167 and 168, C D is equal to C V, and p'K is equal to P p'; and in fig. 168 it is evident that C P′ : P′p' :: C D : p'K; therefore C P′ : P′p' :: C V : P p', and therefore P′ is the perspective of the point P.

FIG. 168.

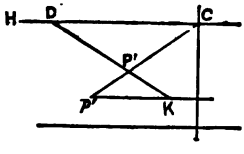

Point of Distance. The point D, fig. 168, is called the *point of distance.*

The position of a point in space is given by stating its distances from the ground and picture planes, and its distance to the right or left of the spectator.

EXAMPLE. *To find the perspectives of the following points :—*

A 1″ *to the right of the spectator,* $1\frac{1}{2}$″ *above the ground, and* 2″ *behind the picture plane.*

B $\frac{1}{2}$″ *to the left of the spectator,* $2\frac{1}{4}$″ *above the ground, and* $1\frac{1}{4}$″ *behind the picture plane.*

C $1\frac{1}{2}$″ *to the left of the spectator, on the ground, and* $\frac{3}{4}$″ *behind the picture plane.*

D 2″ *to the right of the spectator,* 2″ *above the ground, and in the picture plane.*

E *in front of the spectator,* $\frac{3}{4}$″ *above the ground, and* $2\frac{1}{4}$″ *behind the picture plane.*

F *in front of the spectator, on the ground, and in the picture plane.*

Distance of station point from picture plane 3″. *Height of station point from ground* $1\frac{3}{4}$″.

FIG. 169.

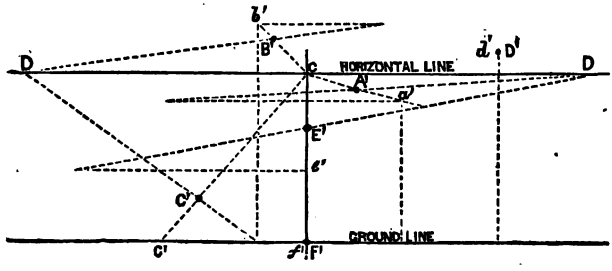

The construction will be understood from the figure. It will be noticed that the perspectives of the points D and F coincide with their orthographic projections on the picture plane.

The perspective projections of parallel lines converge to a point.

Let P′Q′, R′S′ be the perspectives of the parallel lines P Q, R S respectively.

Let V T be drawn parallel to P Q or R S, and, if it meet the picture plane at all, let it meet it at T. V T will be the line of intersection of the planes P Q V, R S V.

Since each of the points P′, Q′, and T are in the picture plane, and also in the plane P Q V, they must all lie on the intersection of these two planes; therefore P′, Q′, and T are

FIG. 170.

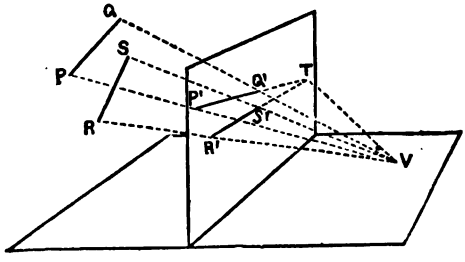

in the same straight line. Similarly, R′, S′, and T are in one straight line; therefore P′Q′ and R′S′, the perspectives of the parallel lines P Q and R S, converge to the point T.

Vanishing Point. The point towards which the perspectives of parallel lines converge is called the *vanishing point* of these lines.

The following particular cases are worthy of notice:—

a. When the lines are perpendicular to the picture plane, V T will also be perpendicular to that plane, and T will coincide with the centre of vision. Thus *the perspectives of lines which are perpendicular to the picture plane converge towards the centre of vision.*

b. When the parallel lines are parallel to the picture plane, V T will also be parallel to that plane; therefore T will be at an infinite distance from V—*i.e.* P′Q′ and R′S′ converge towards a point which is infinitely distant, therefore they must be parallel. Thus *the perspectives of parallel lines which are also parallel to the picture plane are parallel.*

c. When the parallel lines are horizontal, V T will also be

horizontal; therefore T must lie on the horizontal line—*i.e. the perspectives of parallel horizontal lines converge towards a point on the horizontal line.*

d. When the parallel lines are parallel to the vertical plane, V T will be in the vertical plane; therefore T will be in the vertical line—*i.e. the perspectives of parallel lines which are also parallel to the vertical plane converge towards a point on the vertical line.*

e. The perspectives of vertical lines are parallel to the vertical line.

f. The perspectives of horizontal lines which are parallel to the picture plane are parallel to the horizontal line.

g. When the lines are horizontal and inclined at 45° to the picture plane, V T will also be horizontal and inclined at 45° to that plane; therefore T will coincide with the point of distance. Hence *the perspectives of horizontal lines which are inclined at 45° to the picture plane converge towards the point of distance.*

To determine the vanishing point of a line.

Take the picture plane and the horizontal plane containing the station point for the coordinate planes, and on these draw a plan, $a\,b$, and elevation, $a'b'$, of the line whose vanishing point is to be found. H C, the horizontal line, will be the ground line for this plan and elevation.

FIG. 171.

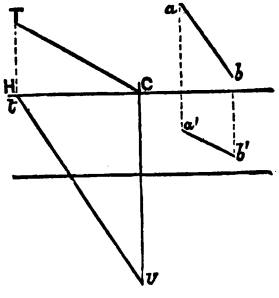

Make C v perpendicular to H C, and equal to the distance of the station point from the picture plane. v will be the plan of the station point, and C its elevation.

Through v draw $v\,t$ parallel to $a\,b$, meeting H C at t. Through C draw C T parallel to $a'b'$ to meet the perpendicular from t to H C at T. The point T is the required vanishing point. For T is the point in which a line through the station

point parallel to the original line A B meets the picture plane; therefore it is the vanishing point of that line.

If the original line is horizontal, C T will coincide with H C, the horizontal line. Therefore T is on the horizontal line, and the plan $v\,t$ makes an angle with the horizontal line equal to the inclination of the original line to the picture plane.

FIG. 172.

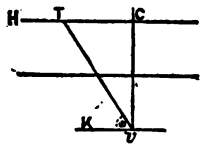

In this case, which is the most common in practice and the only one considered in elementary works on perspective, the construction becomes as follows:—Draw v K parallel to H C, and draw v T, making the angle K v T equal to the inclination of the original line to the picture plane, meeting the horizontal line at T. The point T is the required vanishing point.

To mark off a given length on a given line from a given point in it.

Let S T (fig. 173) be the perspective of a line whose trace on the picture plane is S, and whose vanishing point is T.

FIG. 173.

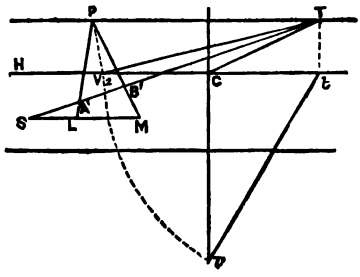

As in fig. 171, v is the plan of the station point, and $v\,t$ the plan of the line which passes through the station point, and is parallel to the line of which S T is the perspective.

With centre t and radius $t\,v$ describe the arc v V_2 meeting H C, the horizontal line at V_2. T V_2 is the real distance of the vanishing point T from the station point. Through T draw

T P parallel to H C, and with T as centre, and T V_2 as radius describe the arc V_2P.

Draw S M parallel to H C. Join P with A′, the perspective of the given point, and produce it to meet S M at L. Make L M equal to the given length. Join P M, meeting S T at B′. A′B′ will be the perspective of a portion of the given line which will be equal to the given length.

The construction is much simplified when the original line is horizontal, for then T is on the horizontal line and *v* T is equal to the true distance of T from the station point. The construction in this case is shown in fig. 174.

FIG. 174.

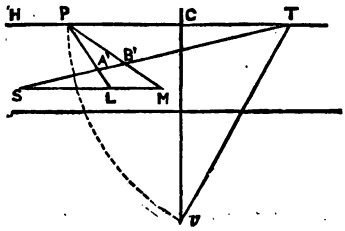

The theory of the construction shown in figs. 173 and 174 will be understood by reference to fig. 175, which shows a perspective view of the ground and picture planes, and all the lines of fig. 173 in their natural positions.

In figs. 173, 174, and 175, the same letters are used to denote the same points. V is the station point; S A B the given line; T its vanishing point, and S its trace on the picture plane. V T is parallel to S A B, and the perspectives of all lines which are parallel to S A B or V T will pass through T, as already explained and illustrated by fig. 170.

Similarly the perspectives of all lines which are parallel to V P will pass through P. Now A L and B M are lines whose perspectives pass through P, therefore A L and B M are parallel to V P. Hence, since S B is parallel to V T, and B M to V P, the angle S B M is equal to the angle T V P.

Again, since S M is parallel to T P and B M to V P, the angle S M B is equal to the angle T P V. But T P is equal

to T V, therefore the angle T V P is equal to the angle T P V, and therefore the angle S B M is equal to the angle S M B. Hence S B is equal to S M. Similarly S A is equal to S L,

FIG. 175.

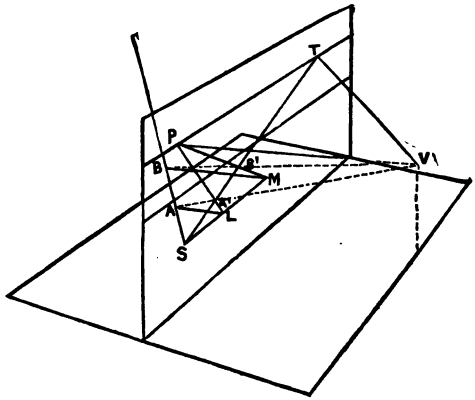

therefore A B is equal to L M. But L M is a line in the picture plane. Therefore if L M be made equal to A B, the construction shown in figs. 173 and 174 will give the perspective A′B′ of the length required.

Measuring Point. The point P in the three preceding figures is called the *measuring point* for the vanishing point T. It is evident that each vanishing point can have two measuring points, one to the right and another an equal distance to the left.

EXERCISES.

1. The station point being 5 feet from the ground and 12 feet from the picture plane, show the perspectives of the following points. Scale $\frac{1}{4}$ inch to a foot.

A 10 feet to left of spectator, 5 feet within picture, and 2 feet above ground.

B 7 feet to right of spectator, 3 feet within picture, and 4 feet above ground.

C 9 feet to right of spectator, 9 feet within picture, and 9 feet above ground.

D 8 feet to left of spectator, 12 feet within picture, on ground.

2. The height of the eye is 6 feet, and its distance from the picture plane 13 feet. Draw the perspectives of the following lines to a scale of $\frac{1}{4}$ inch to a foot.

A B, 5 feet long, perpendicular to the picture plane, and 6 feet to the right of the spectator; the nearest end being 2 feet within the picture.

C D, horizontal and parallel to the picture plane, 1 foot from ground and 1 foot within, one extremity 1 foot to the right and the other extremity 5 feet to the left of the spectator.

E F, vertical, 9 feet long, lower end on ground, 6 feet to left and 2 feet within.

3. Join the middle points of the perspectives of the lines given in the preceding exercise, and determine the true form of the triangle of which the triangle formed in this way is the perspective.

4. Height of spectator $5\frac{1}{2}$ feet. Distance of spectator 14 feet. Scale $\frac{1}{4}$ in. = 1 foot.

Put into perspective a square of 3 feet side when in each of the following positions:—

(*a*) Lying on the ground, with the front side parallel to the picture plane and 1 foot within, the nearest corner being 2 feet to left of spectator.

(*b*) Lying on the ground, with the nearest corner 1 foot

to right and 1 foot within. A side containing the nearest corner to make an angle of 30° with the picture plane.

(*c*) Its plane vertical and inclined at 50° to the picture plane. The nearest side to be in the picture plane, and 7 feet to the right of the spectator.

(*d*) Its plane parallel to the picture plane, and 5 feet within. Nearest side vertical and 6 feet to left. Lower end of nearest side 3 feet above ground.

5. Place the following solids in perspective:—

(*a*) A cube of 2-inch edge with one face on the ground, nearest vertical edge 4 inches to left and 1 inch within; a face containing the nearest vertical edge being inclined at 60° to picture plane.

(*b*) A hexagonal prism—base $1\frac{1}{4}$ inch side, axis $2\frac{1}{4}$ inches—has one rectangular face on the ground. The axis is inclined at 65° to the picture plane, and the nearest end of the axis is 5 inches to right and 1 inch within.

Station point 3 inches from ground, and 6 inches from picture plane.

6. Show the perspective projection of a circle 2″ diameter in each of the following positions:—

(*a*) When its plane is horizontal, and its centre 3″ to right, $2\frac{1}{2}$″ within and $1\frac{1}{2}$″ above the ground.

(*b*) When its plane is perpendicular to the ground line, and its centre is $2\frac{1}{2}$″ to right, 3″ within, and $2\frac{1}{2}$″ above the ground.

Height of eye $3\frac{1}{2}$″. Distance of eye from picture plane $6\frac{1}{2}$″.

7. A nut is of the form of a hexagonal prism—side of base 1·7″, axis 1·7″—with a cylindrical hole through it 1·7″ in diameter, the axis of the hole coinciding with the axis of the prism. The base of the prism is on the ground and the nearest vertical edge is in the picture plane. A face containing the nearest edge is inclined at 8° to the picture plane. The height of the station point is to be 3·5″, it is opposite the centre of the nut, and its distance from the picture plane is 6·5″. Make a perspective view of the nut.

8. What must be the position of a circle with respect to

the picture plane, &c., in order that its perspective projection may be a parabola. Illustrate by a diagram.

9. A sphere will always appear as a circle from whatever point it is looked at. The perspective of a sphere may, however, be an ellipse. Explain the reason of this apparent contradiction.

10. A square pyramid (side of base 2·6″, axis 3·5″) lies with one face on the H.P. The nearest corner of that face (the vertex) to the picture plane is ·5″ away, and the vertical plane which contains the axis makes an angle of 30° with the picture plane. Draw its perspective projection, taking the other conditions at your pleasure.

APPENDIX.

Examination Paper on Practical Solid Geometry, set by the Science and Art Department, May 1883.

SECOND STAGE OR ADVANCED EXAMINATION.[1]

Only *eight* questions are to be attempted.

Solid Geometry.

1. Represent—
   - *a.* A line inclined 25° to both planes of projection.
   - *b.* A plane at right angles to both planes of projection, and a line perpendicular to it.
   - *c.* Two planes at right angles to each other and to the vertical plane of projection. (15.)[2]

*2. Determine the intersection of the given line *s't'*, *st* with the given plane. (14.)

*3. The given figure represents a pickaxe; *a* and *b* rest on the horizontal plane; the plane of the figure is inclined at 55°. Draw the plan and an elevation on a ground line which makes 35° with *ab*. (24.)

4. Draw the *plans* of a right cone and a right cylinder which touch each other. Any positions may be chosen. (26.)

*5. From the given point *p* drop a perpendicular on the line joining *q* and *r*. (Unit 0·1″.) (24.)

[1] For the Elementary Paper see Appendix to Part I.

[2] The relative values of the questions are given by the numbers in brackets at the end of each question.

* Questions marked (*) have accompanying diagrams. The diagrams have been reduced to about ⅘ths of the size which they appeared in the examination paper.

FIG. 176.

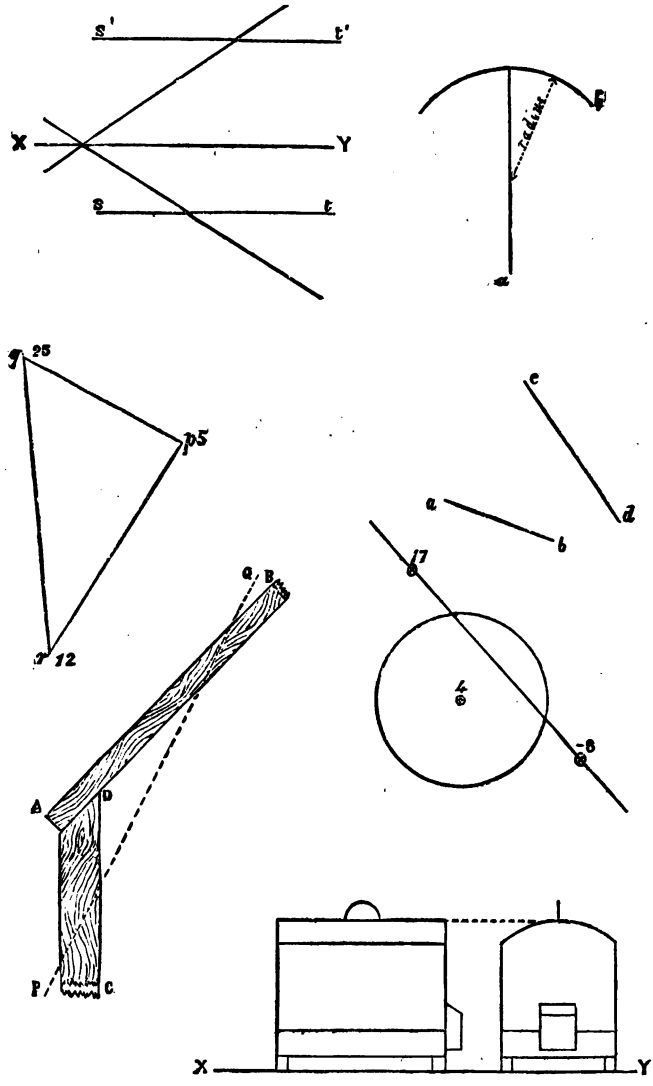

*6. The two given lines *a b*, *c d* in the horizontal plane are the bases of two isosceles triangles *a b* E, *c d* E, which have a common vertex E. The height of the triangle *a b* E is $2\frac{3}{4}''$. Complete the plans of the triangles and draw their elevations on a line parallel to *a c*. (24.)

*7. Determine the points in which the given line cuts the given sphere. (24.)

*8. A B is the plan of a horizontal ridge piece 11″ deep.[1] C D is the plan of a rafter 7″ deep, butting up against A B, and inclined at 40° to the horizontal plane. Determine the *true form* of the end of C D where it rests against A B. Make a sectional elevation on P Q. (28.)

*9. The given figures represent a birdcage. Supposing it to stand on the horizontal plane, draw an elevation on a plane making 37° with the long sides of the base. Make a section by a vertical plane which bisects one long and one short side of the base. (30.)

*10. Make an isometric view of the birdcage, looking down on the top. N.B.—An isometric scale is not to be used. Lengths may be transferred direct from the given figures on to the isometric lines. (30.)

HONOURS EXAMINATION.

Only *eight* questions are to be attempted.

Solid Geometry.

*1. Two equal circular discs, *a b*, *c d*, roll on the horizontal plane, turning about a horizontal axis *e f*. The axis *e f* turns on a vertical spindle *g h*. Draw the elevation on a vertical plane of one loop of the curve traced by a point on the circumference of one of the discs. (55.)

*2. Draw the projections of any two spheres of $1\frac{1}{2}''$ diameter

[1] In the examination paper the figure to this question was drawn to the scale of $\frac{1}{8}$th.

FIG. 177.

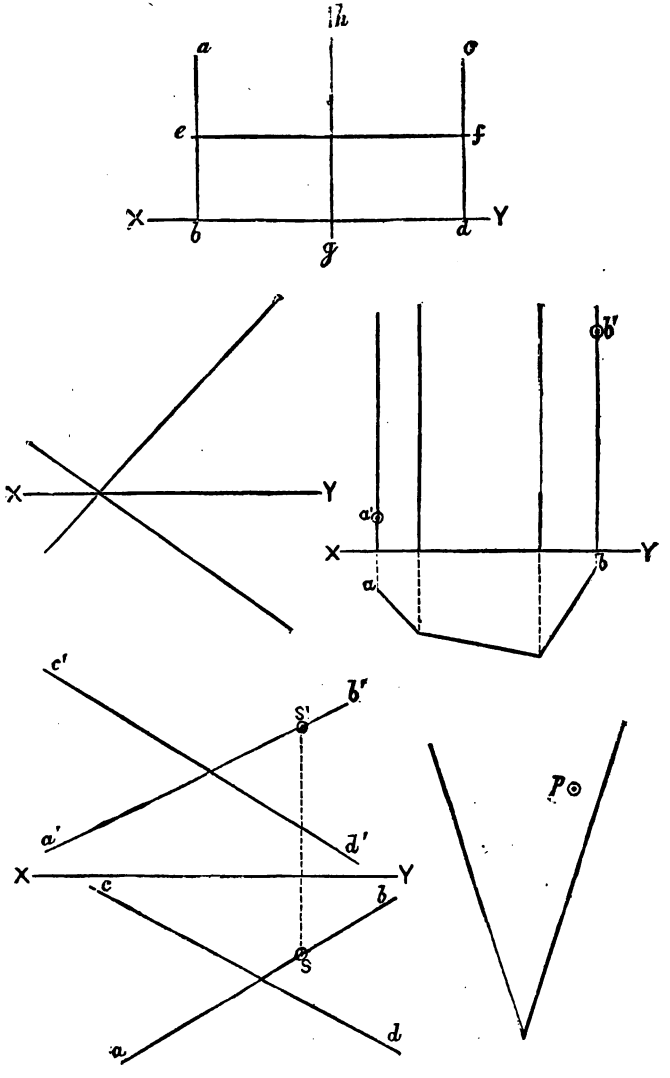

FIG. 178.

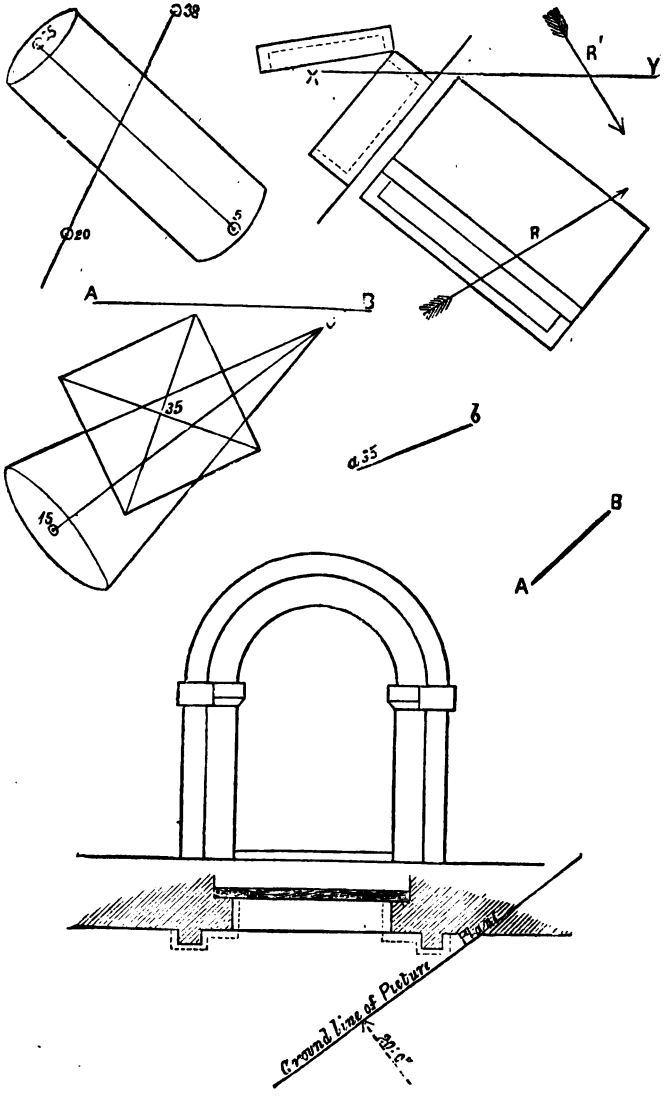

which touch the given plane and both planes of projection How many spheres are there which will fulfil these conditions? (40.)

*3. A portion of the plan and elevation of a vertical right prism is given. Determine the length of the shortest line which can be drawn on the surface of the prism from the point $a\,a'$ to $b\,b'$ (45.)

*4. From the given point $s\,s'$ on the given line $a\,b$, $a'b'$, draw a line $2\frac{3}{4}''$ long to meet the given line $c\,d$, $c'd'$. (45.)

*5. The plan of a right cone resting on the horizontal plane is given. Determine the index of the point, of which p is the plan. Draw the plan of a sphere of 2″ diameter which touches the given cone at this point. (Unit 0·1″.) (50.)

*6. Determine the points of intersection of the given line and right cylinder. (Unit 0·1″.) (45.)

*7. The given right square pyramid standing on the horizontal plane is penetrated by the given right cone. Draw the elevation of the curve of intersection on $A\,B$ as ground line. (Unit 0·1″.) (50.)

*8. The projections of an open box are given, and also those of the rays of light R R′. Draw the shadow cast by the box on the horizontal plane, and show the shaded portions of the box in an elevation on $x\,y$ as ground line. (55.)

*9. $A\,B$ is the shadow cast by the line $a\,b$ on the horizontal plane. Determine the *inclination* of the rays of light, and also the index of the point b. (Unit 0·1″.) (40.)

*10. Make a perspective of the given doorway,[1] the station point to be 5′·0″ above the ground and 20′·0″ from the picture plane. The plan of a portion of the principal visual ray is given. (55.)

[1] In the examination paper the figure to this question was drawn to the scale of $\frac{3}{8}'' = 1'$.

PRINTED BY
SPOTTISWOODE AND CO., NEW-STREET SQUARE
LONDON

TEXT-BOOKS OF SCIENCE.

PHOTOGRAPHY. By Captain W. DE WIVELESLIE ABNEY, F.R.S. late Instructor in Chemistry and Photography at the School of Military Engineering, Chatham. With 105 Woodcuts. Price 3*s.* 6*d.*

On the STRENGTH of MATERIALS and STRUCTURES: the Strength of Materials as depending on their quality and as ascertained by Testing Apparatus; the Strength of Structures, as depending on their form and arrangement, and on the materials of which they are composed. By Sir J. ANDERSON, C.E. &c. Price 3*s.* 6*d.*

INTRODUCTION to the STUDY of ORGANIC CHEMISTRY; the CHEMISTRY of CARBON and its COMPOUNDS. By HENRY E. ARMSTRONG, Ph.D. F.C.S. With 8 Woodcuts. Price 3*s.* 6*d.*

ELEMENTS of ASTRONOMY. By Sir R. S. BALL, LL.D. F.R.S. Andrews Professor of Astronomy in the Univ. of Dublin, Royal Astronomer of Ireland. With 136 Figures and Diagrams. Price 6*s.*

RAILWAY APPLIANCES. A Description of Details of Railway Construction subsequent to the completion of Earthworks and Masonry, including a short Notice of Railway Rolling Stock. By J. W. BARRY. With 207 Woodcuts. Price 3*s.* 6*d.*

SYSTEMATIC MINERALOGY. By HILARY BAUERMAN, F.G.S. Associate of the Royal School of Mines. With 373 Diagrams. Price 6*s.*

DESCRIPTIVE MINERALOGY. By HILARY BAUERMAN, F.G.S. &c. With 236 Woodcuts and Diagrams. Price 6*s.*

METALS, their PROPERTIES and TREATMENT. By C. L. BLOXAM and A. K. HUNTINGTON, Professors in King's College, London. With 130 Wood Engravings. Price 5*s.*

PRACTICAL PHYSICS. By R. T. GLAZEBROOK, M.A. F.R.S. and W. N. SHAW, M.A. With 62 Woodcuts. Price 6*s.*

PHYSICAL OPTICS. By R. T. GLAZEBROOK, M.A. F.R.S. Fellow and Lecturer of Trin. Coll. Demonstrator of Physics at the Cavendish Laboratory, Cambridge. With 183 Woodcuts of Apparatus, &c. Price 6*s.*

The ART of ELECTRO-METALLURGY, including all known Processes of Electro-Deposition. By G. GORE, LL.D. F.R.S. With 56 Woodcuts. Price 6*s.*

ALGEBRA and TRIGONOMETRY. By the Rev. WILLIAM NATHANIEL GRIFFIN, B.D. Price 3*s.* 6*d.* NOTES ON, with SOLUTIONS. Price 3*s.* 6*d.*

THE STEAM ENGINE. By GEORGE C. V. HOLMES, Whitworth Scholar; Secretary of the Institution of Naval Architects. With 212 Illustrations and Diagrams. Price 6*s.*

London: LONGMANS, GREEN, & CO.

TEXT-BOOKS OF SCIENCE.

ELECTRICITY and MAGNETISM. By FLEEMING JENKIN, F.R.SS. L. & E. late Professor of Engineering in the University of Edinburgh. Price 3*s.* 6*d.*

THEORY of HEAT. By J. CLERK MAXWELL, M.A. LL.D. Edin. F.R.SS. L. & E. With 41 Woodcuts. Price 3*s.* 6*d.*

TECHNICAL ARITHMETIC and MENSURATION. By CHARLES W. MERRIFIELD, F.R.S. Price 3*s.* 6*d.*

KEY to MERRIFIELD'S TEXT-BOOK of TECHNICAL ARITHMETIC and MENSURATION. By the Rev. JOHN HUNTER, M.A. formerly Vice-Principal of the National Society's Training College, Battersea. Price 3*s.* 6*d.*

INTRODUCTION to the STUDY of INORGANIC CHEMISTRY. By WILLIAM ALLEN MILLER, M.D. LL.D. F.R.S. With 71 Woodcuts. Price 3*s.* 6*d.*

TELEGRAPHY. By W. H. PREECE, C.E. & J. SIVEWRIGHT, M.A. With 160 Woodcuts. Price 5*s.*

The STUDY of ROCKS, an ELEMENTARY Text-Book of PETROLOGY. By FRANK RUTLEY, F.G.S. of Her Majesty's Geological Survey. With 6 Plates and 88 Woodcuts. Price 4*s.* 6*d.*

WORKSHOP APPLIANCES, including Descriptions of some of the Gauging and Measuring Instruments—Hand Cutting Tools, Lathes, Drilling, Planing, and other Machine Tools used by Engineers. By C. P. B. SHELLEY, M.I.C.E. With 292 Woodcuts. Price 4*s.* 6*d.*

STRUCTURAL and PHYSIOLOGICAL BOTANY. By Dr. OTTO WILHELM THOMÉ, Professor of Botany, School of Science and Art, Cologne. Translated by A. W. BENNETT, M.A. B.Sc. F.L.S. With 600 Woodcuts. Price 6*s.*

QUANTITATIVE CHEMICAL ANALYSIS. By T. E. THORPE, F.R.S.E. Ph.D. Professor of Chemistry in the Andersonian University, Glasgow. With 88 Woodcuts. Price 4*s.* 6*d.*

MANUAL of QUALITATIVE ANALYSIS and LABORATORY PRACTICE. By T. E. THORPE, Ph.D. F.R.S.E. Professor of Chemistry in the Andersonian University, Glasgow; and M. M. PATTISON MUIR. Price 3*s.* 6*d.*

INTRODUCTION to the STUDY of CHEMICAL PHILOSOPHY; the PRINCIPLES of THEORETICAL and SYSTEMATICAL CHEMISTRY. By WILLIAM A. TILDEN, B.Sc. London F.C.S. With 5 Woodcuts. Price 3*s.* 6*d.* With Answers to Problems, 4*s.* 6*d.*

ELEMENTS of MACHINE DESIGN; an Introduction to the Principles which determine the Arrangement and Proportion of the Parts of Machines, and a Collection of Rules for Machine Design. By W. CAWTHORNE UNWIN, B.Sc. Assoc. Inst. C.E. With 325 Woodcuts. Price 6*s.*

PLANE and SOLID GEOMETRY. By the Rev. H. W. WATSON, formerly Fellow of Trinity College, Cambridge. Price 3*s.* 6*d.*

London: LONGMANS, GREEN, & CO.

SCIENTIFIC CLASS-BOOKS.

WORKS BY JOHN TYNDALL, F.R.S.

HEAT, a MODE of MOTION. Crown 8vo. 12*s.*

SOUND. With 204 Woodcuts. Crown 8vo. 10*s* 6*d* .

ESSAYS on the FLOATING MATTER of the AIR in RELATION to PUTREFACTION and INFECTION. With 24 Woodcuts. Crown 8vo. 7*s.* 6*d.*

LECTURES on LIGHT, delivered in America in 1872 and 1873. With 57 Diagrams. Crown 8vo. 5*s.*

LESSONS in ELECTRICITY at the Royal Institution, 1875–76. With 58 Woodcuts. Crown 8vo. 2*s.* 6*d.*

NOTES of a COURSE of SEVEN LECTURES on ELECTRICAL PHENOMENA and THEORIES, delivered at the Royal Institution. Crown 8vo. 1*s.* sewed, 1*s.* 6*d.* cloth.

NOTES of a COURSE of NINE LECTURES on LIGHT, delivered at the Royal Institution. Crown 8vo. 1*s.* sewed, 1*s.* 6*d.* cloth.

GANOT'S NATURAL PHILOSOPHY for GENERAL READERS and YOUNG PERSONS: a Course of Physics divested of Mathematical Formulæ, expressed in the language of daily life. Translated and edited from Ganot's *Cours Élémentaire de Physique*, by E. ATKINSON, Ph.D. F.C.S. The Fifth Edition, with 20 pages of new matter, 2 Plates, and 495 Woodcuts. Crown 8vo. 7*s.* 6*d.*

GANOT'S ELEMENTARY TREATISE on PHYSICS, Experimental and Applied, for the use of Colleges and Schools. Translated and edited from Ganot's *Éléments de Physique*, by E. ATKINSON, Ph.D. F.C.S. Twelfth Edition, revised and enlarged; with 5 Coloured Plates and 923 Woodcuts. Crown 8vo. 15*s.*

LESSONS in ELEMENTARY MECHANICS. Designed for the use of Schools, and of Candidates for the London Matriculation, and other Examinations; with 52 Examples, nearly 500 Exercises and Examination Questions with Answers, and 124 Woodcuts. By Sir PHILIP MAGNUS, B.Sc. B.A. Eleventh Edition. Fcp. 8vo. 3*s.* 6*d.*

PRINCIPLES of MECHANICS. By T. M. GOODEVE, M.A. Professor of Mechanics at the Royal School of Mines. New Edition. With 253 Woodcuts. Crown 8vo. 6*s.*

The ELEMENTS of MECHANISM. By T. M. GOODEVE, M.A. Professor of Mechanics at the Royal School of Mines. New Edition. With 342 Woodcuts. Crown 8vo. 6*s.*

A MANUAL of MECHANICS: an Elementary Text-Book for Students of Applied Mechanics. By T. M. GOODEVE, M.A. With 138 Illustrations and Diagrams, and 141 Examples taken from the Science Department Examination Papers, with Answers. Fcp. 8vo. 2*s.* 6*d.*

PRACTICAL MECHANICS: an Elementary Introduction to their Study. With 855 Exercises with Answers and 184 Diagrams. By the Rev. J. F. TWISDEN. Crown 8vo. 10*s.* 6*d.*

FIRST LESSONS in THEORETICAL MECHANICS. By the Rev. J. F. TWISDEN. With 172 Examples, numerous Exercises, and 154 Diagrams. Crown 8vo. 8*s.* 6*d.*

London: LONGMANS, GREEN, & CO.

SCIENTIFIC CLASS-BOOKS.

THE LONDON SCIENCE CLASS-BOOKS.

Edited by G. CAREY FOSTER, F.R.S. & Sir PHILIP MAGNUS, B.Sc. B.A.

ASTRONOMY. By Sir R. S. BALL. 41 Diagrams. 1*s.* 6*d.*

BOTANY. Outlines of Morphology and Physiology. By W. R. MCNAB, M.D. 42 Diagrams. 1*s.* 6*d.*

BOTANY. Outlines of the Classification of Plants. By W. R. MCNAB, M.D. 118 Diagrams. 1*s.* 6*d.*

GEOMETRY, CONGRUENT FIGURES. By O. HENRICI, Ph.D. F.R.S. 141 Diagrams. 1*s.* 6*d.*

HYDROSTATICS and PNEUMATICS. By Sir P. MAGNUS. 79 Diagrams. 1*s.* 6*d.* (To be had also with Answers, 2*s.*)
*** The Worked Solutions of the Problems, 2*s.*

The LAWS of HEALTH. By W. H. CORFIELD, M.A. 22 Illustrations. 1*s.* 6*d.*

MECHANICS. By Sir R. S. BALL. 89 Diagrams. 1*s.* 6*d.*

MOLECULAR PHYSICS and SOUND. By F. GUTHRIE, F.R.S. 91 Diagrams. 1*s.* 6*d.*

THERMODYNAMICS. By R. WORMELL. 41 Diagrams. 1*s.* 6*d.*

ZOOLOGY of the INVERTEBRATE ANIMALS. By A. MCALISTER, M.D. 59 Diagrams. 1*s.* 6*d.*

ZOOLOGY of the VERTEBRATE ANIMALS. By A. MCALISTER, M.D. 77 Diagrams. 1*s.* 6*d.*

LESSONS in ELEMENTARY MECHANICS. Specially adapted to the requirements of the Revised New Code. By W. H. GRIEVE. With 103 Illustrations. Crown 8vo. 1*s.* 6*d.*

INORGANIC CHEMISTRY, Theoretical and Practical; with an Introduction to the Principles of Chemical Analysis, Inorganic and Organic; an Elementary Text-Book. By W. JAGO, F.C.S. Sixth Edition, revised and enlarged. With 46 Woodcuts. Fcp. 8vo. 2*s.*

A SHORT TEXT-BOOK of INORGANIC CHEMISTRY. By Dr. HERMANN KOLBE, Professor of Chemistry in the University of Leipzig. Translated and edited from the Second German Edition by T. S. HUMPIDGE, Ph.D. B.Sc. (Lond.), Professor of Chemistry and Physics in the University College of Wales, Aberystwith. With a Coloured Table of Spectra and 66 Illustrations engraved on Wood. Crown 8vo. 7*s.* 6*d.*

EXPERIMENTAL CHEMISTRY for Junior Students. By J. EMERSON REYNOLDS, M.D. F.R.S. Professor of Chemistry, University of Dublin. Fcp. 8vo. with numerous Woodcuts.

PART I. INTRODUCTORY. 1*s.* 6*d.* PART II. NON-METALS. 2*s.* 6*d.*
PART III. METALS AND ALLIED BODIES. 3*s.* 6*d.*

ELEMENTARY BOTANY, Theoretical and Practical. A Text-Book designed primarily for Students of Science Classes connected with the Science and Art Department of the Council of Education. By HENRY EDMONDS, B.Sc. Lond. With 312 Diagrams and Woodcuts. Fcp. 8vo. 2*s.*

London: LONGMANS, GREEN, & CO.

AUGUST 1887.

GENERAL LISTS OF WORKS

PUBLISHED BY

MESSRS. LONGMANS, GREEN, & CO.

39 PATERNOSTER ROW, LONDON, E.C.; AND

15 EAST 16th STREET, NEW YORK.

HISTORY, POLITICS, HISTORICAL MEMOIRS, &c.

Abbey's The English Church and its Bishops, 1700–1800. 2 vols. 8vo. 24s.

Abbey and Overton's English Church in the Eighteenth Century. Cr. 8vo. 7s. 6d.

Arnold's Lectures on Modern History. 8vo. 7s. 6d.

Bagwell's Ireland under the Tudors. Vols. 1 and 2. 2 vols. 8vo. 32s.

Ball's The Reformed Church of Ireland, 1537–1886. 8vo. 7s. 6d.

Boultbee's History of the Church of England, Pre-Reformation Period. 8vo. 15s.

Buckle's History of Civilisation. 3 vols. crown 8vo. 24s.

Cox's (Sir G. W.) General History of Greece. Crown 8vo. Maps, 7s. 6d.

Creighton's History of the Papacy during the Reformation. 8vo. Vols. 1 and 2, 32s. Vols. 3 and 4, 24s.

De Tocqueville's Democracy in America. 2 vols. crown 8vo. 16s.

D'Herisson's The Black Cabinet. Crown 8vo. 7s. 6d.

Doyle's English in America: Virginia, Maryland, and the Carolinas, 8vo. 18s.
— — — The Puritan Colonies, 2 vols. 8vo. 36s.

Epochs of Ancient History. Edited by the Rev. Sir G. W. Cox, Bart. and C. Sankey, M.A. With Maps. Fcp. 8vo. price 2s. 6d. each.

- Beesly's Gracchi, Marius, and Sulla.
- Capes's Age of the Antonines.
- — Early Roman Empire.
- Cox's Athenian Empire.
- — Greeks and Persians.
- Curteis's Rise of the Macedonian Empire.
- Ihne's Rome to its Capture by the Gauls.
- Merivale's Roman Triumvirates.
- Sankey's Spartan and Theban Supremacies.
- Smith's Rome and Carthage, the Punic Wars.

Epochs of Modern History. Edited by C. Colbeck, M.A. With Maps. Fcp. 8vo. price 2s. 6d. each.

- Church's Beginning of the Middle Ages.
- Cox's Crusades.
- Creighton's Age of Elizabeth.
- Gairdner's Houses of Lancaster and York.
- Gardiner's Puritan Revolution.
- — Thirty Years' War.
- — (Mrs.) French Revolution, 1789–1795.
- Hale's Fall of the Stuarts.
- Johnson's Normans in Europe.
- Longman's Frederick the Great and the Seven Years' War.
- Ludlow's War of American Independence.
- M'Carthy's Epoch of Reform, 1830–1850.
- Moberly's The Early Tudors.
- Morris's Age of Queen Anne.
- — The Early Hanoverians.
- Seebohm's Protestant Revolution.
- Stubbs's The Early Plantagenets.
- Warburton's Edward III.

Epochs of Church History. Edited by the Rev. Mandell Creighton, M.A. Fcp. 8vo. price 2s. 6d. each.

- Brodrick's A History of the University of Oxford.
- Carr's The Church and the Roman Empire.
- Overton's The Evangelical Revival in the Eighteenth Century.
- Perry's The Reformation in England.
- Plummer's The Church of the Early Fathers.
- Tucker's The English Church in other Lands.

*** *Other Volumes in preparation.*

LONGMANS, GREEN, & CO. London and New York.

Freeman's Historical Geography of Europe. 2 vols. 8vo. 31*s.* 6*d.*
Froude's English in Ireland in the 18th Century. 3 vols. crown 8vo. 18*s.*
— History of England. Popular Edition. 12 vols. crown 8vo. 3*s.* 6*d.* each.
Gardiner's History of England from the Accession of James I. to the Outbreak of the Civil War. 10 vols. crown 8vo. 60*s.*
— History of the Great Civil War, 1642–1649 (3 vols.) Vol. 1, 1642–1644, 8vo. 21*s.*
Greville's Journal of the Reign of Queen Victoria, 1837–1852. 3 vols. 8vo. 36*s.* 1852–1860, 2 vols. 8vo. 24*s.*
Historic Towns. Edited by E. A. Freeman, D.C.L. and the Rev. William Hunt, M.A. With Maps and Plans. Crown 8vo. 3*s.* 6*d.* each.

London. By W. E. Loftie.	Bristol. By the Rev. W. Hunt.
Exeter. By E. A. Freeman.	Oxford. By the Rev. C. W. Boase.

*** *Other volumes in preparation.*

Lecky's History of England in the Eighteenth Century. Vols. 1 & 2, 1700–1760, 8vo. 36*s.* Vols. 3 & 4, 1760–1784, 8vo. 36*s.* Vols. 5 & 6, 1784–1793, 36*s.*
— History of European Morals. 2 vols. crown 8vo. 16*s.*
— — — Rationalism in Europe. 2 vols. crown 8vo. 16*s.*
Longman's Life and Times of Edward III. 2 vols. 8vo. 28*s.*
Macaulay's Complete Works. Library Edition. 8 vols. 8vo. £5. 5*s.*
— — — Cabinet Edition. 16 vols. crown 8vo. £4. 16*s.*
— History of England :—

Student's Edition. 2 vols. cr. 8vo. 12*s.*	Cabinet Edition. 8 vols. post 8vo. 48*s.*
People's Edition. 4 vols. cr. 8vo. 16*s.*	Library Edition. 5 vols. 8vo. £4.

Macaulay's Critical and Historical Essays, with Lays of Ancient Rome In One Volume :—

Authorised Edition. Cr. 8vo. 2*s.* 6*d.* or 3*s.* 6*d.* gilt edges.	Popular Edition. Cr. 8vo. 2*s.* 6*d.*

Macaulay's Critical and Historical Essays :—

Student's Edition. 1 vol. cr. 8vo. 6*s.*	Cabinet Edition. 4 vols. post 8vo. 24*s.*
People's Edition. 2 vols. cr. 8vo. 8*s.*	Library Edition. 3 vols. 8vo. 36*s.*

Macaulay's Speeches corrected by Himself. Crown 8vo. 3*s.* 6*d.*
Malmesbury's (Earl of) Memoirs of an Ex-Minister. Crown 8vo. 7*s.* 6*d.*
May's Constitutional History of England, 1760–1870. 3 vols. crown 8vo. 18*s.*
— Democracy in Europe. 2 vols. 8vo. 32*s.*
Merivale's Fall of the Roman Republic. 12mo. 7*s.* 6*d.*
— General History of Rome, B.C. 753–A.D. 476. Crown 8vo. 7*s.* 6*d.*
— History of the Romans under the Empire. 8 vols. post 8vo. 48*s.*
Nelson's (Lord) Letters and Despatches. Edited by J. K. Laughton. 8vo. 16*s.*
Pears' The Fall of Constantinople. 8vo. 16*s.*
Saintsbury's Manchester: a Short History. Crown 8vo. 3*s.* 6*d.*
Seebohm's Oxford Reformers—Colet, Erasmus, & More. 8vo. 14*s.*
Short's History of the Church of England. Crown 8vo. 7*s.* 6*d.*
Smith's Carthage and the Carthaginians. Crown 8vo. 10*s.* 6*d.*
Taylor's Manual of the History of India. Crown 8vo. 7*s.* 6*d.*
Todd's Parliamentary Government in England (2 vols.) Vol. 1, 8vo. 24*s.*
Vitzthum's St. Petersburg and London, 1852–1864. 2 vols. 8vo. 30*s.*
Walpole's History of England, from 1815. 5 vols. 8vo. Vols. 1 & 2, 1815–1832, 36*s.* Vol. 3, 1832–1841, 18*s.* Vols. 4 & 5, 1841–1858, 36*s.*
Wylie's History of England under Henry IV. Vol. 1, crown 8vo. 10*s.* 6*d.*

BIOGRAPHICAL WORKS

Armstrong's (E. J.) Life and Letters. Edited by G. F. Armstrong. Fcp. 8vo. 7s. 6d.

Bacon's Life and Letters, by Spedding. 7 vols. 8vo. £4. 4s.

Bagehot's Biographical Studies. 1 vol. 8vo. 12s.

Carlyle's Life, by J. A. Froude. Vols. 1 & 2, 1795–1835, 8vo. 32s. Vols. 3 & 4, 1834–1881, 8vo. 32s.

— (Mrs.) Letters and Memorials. 3 vols. 8vo. 36s.

Doyle (Sir F. H.) Reminiscences and Opinions. 8vo. 16s.

English Worthies. Edited by Andrew Lang. Crown 8vo. 2s. 6d. each.

Charles Darwin. By Grant Allen.
Shaftesbury (The First Earl). By H. D. Traill.
Admiral Blake. By David Hannay.
Marlborough. By Geo. Saintsbury.
Steele. By Austin Dobson.
Ben Jonson. By J. A. Symonds.
George Canning. By Frank H. Hill.
Claverhouse. By Mowbray Morris.

*** *Other Volumes in preparation.*

Fox (Charles James) The Early History of. By Sir G. O. Trevelyan, Bart. Crown 8vo. 6s.

Froude's Cæsar: a Sketch. Crown 8vo. 6s.

Hamilton's (Sir W. R.) Life, by Graves. Vols. 1 and 2, 8vo. 15s. each.

Havelock's Life, by Marshman. Crown 8vo. 3s. 6d.

Hobart Pacha's Sketches from my Life. Crown 8vo. 7s. 6d.

Macaulay's (Lord) Life and Letters. By his Nephew, Sir G. O. Trevelyan, Bart. Popular Edition, 1 vol. crown 8vo. 6s. Cabinet Edition, 2 vols. post 8vo. 12s. Library Edition, 2 vols. 8vo. 36s.

Mendelssohn's Letters. Translated by Lady Wallace. 2 vols. cr. 8vo. 5s. each.

Mill (James) Biography of, by Prof. Bain. Crown 8vo. 5s.

— (John Stuart) Recollections of, by Prof. Bain. Crown 8vo. 2s. 6d.

— — Autobiography. 8vo. 7s. 6d.

Müller's (Max) Biographical Essays. Crown 8vo. 7s. 6d.

Newman's Apologia pro Vitâ Suâ. Crown 8vo. 6s.

Pasteur (Louis) His Life and Labours. Crown 8vo. 7s. 6d.

Shakespeare's Life (Outlines of), by Halliwell-Phillipps. 2 vols. royal 8vo. 10s. 6d.

Southey's Correspondence with Caroline Bowles. 8vo. 14s.

Stephen's Essays in Ecclesiastical Biography. Crown 8vo. 7s. 6d.

Wellington's Life, by Gleig. Crown 8vo. 6s.

MENTAL AND POLITICAL PHILOSOPHY, FINANCE, &c.

Amos's View of the Science of Jurisprudence. 8vo. 18s.

— Primer of the English Constitution. Crown 8vo. 6s.

Bacon's Essays, with Annotations by Whately. 8vo. 10s. 6d.

— Works, edited by Spedding. 7 vols. 8vo. 73s. 6d.

Bagehot's Economic Studies, edited by Hutton. 8vo. 10s. 6d.

— The Postulates of English Political Economy. Crown 8vo. 2s. 6d.

Bain's Logic, Deductive and Inductive. Crown 8vo. 10s. 6d.

PART I. Deduction, 4s. | PART II. Induction, 6s. 6d.

— Mental and Moral Science. Crown 8vo. 10s. 6d.

— The Senses and the Intellect. 8vo. 15s.

— The Emotions and the Will. 8vo. 15s.

— Practical Essays. Crown 8vo. 4s. 6d.

Buckle's (H. T.) Miscellaneous and Posthumous Works. 2 vols. crown 8vo. 21*s.*
Crump's A Short Enquiry into the Formation of English Political Opinion. 8vo. 7*s.* 6*d.*
Dowell's A History of Taxation and Taxes in England. 4 vols. 8vo. 48*s.*
Green's (Thomas Hill) Works. (3 vols.) Vols. 1 & 2, Philosophical Works. 8vo. 16*s.* each.
Hume's Essays, edited by Green & Grose. 2 vols. 8vo. 28*s.*
— Treatise of Human Nature, edited by Green & Grose. 2 vols. 8vo. 28*s.*
Ladd's Elements of Physiological Psychology. 8vo. 21*s.*
Lang's Custom and Myth: Studies of Early Usage and Belief. Crown 8vo. 7*s.* 6*d.*
Leslie's Essays in Political and Moral Philosophy. 8vo. 10*s.* 6*d.*
Lewes's History of Philosophy. 2 vols. 8vo. 32*s.*
Lubbock's Origin of Civilisation. 8vo. 18*s.*
Macleod's Principles of Economical Philosophy. In 2 vols. Vol. 1, 8vo. 15*s.* Vol. 2, Part I. 12*s.*
— The Elements of Economics. (2 vols.) Vol. 1, cr. 8vo. 7*s.* 6*d.* Vol. 2, Part I. cr. 8vo. 7*s.* 6*d.*
— The Elements of Banking. Crown 8vo. 5*s.*
— The Theory and Practice of Banking. Vol. 1, 8vo. 12*s.* Vol. 2, 14*s.*
— Economics for Beginners. 8vo. 2*s.* 6*d.*
— Lectures on Credit and Banking. 8vo. 5*s.*
Mill's (James) Analysis of the Phenomena of the Human Mind. 2 vols. 8vo. 28*s.*
Mill (John Stuart) on Representative Government. Crown 8vo. 2*s.*
— — on Liberty. Crown 8vo. 1*s.* 4*d.*
— — Examination of Hamilton's Philosophy. 8vo. 16*s.*
— — Logic. Crown 8vo. 5*s.*
— — Principles of Political Economy. 2 vols. 8vo. 30*s.* People's Edition, 1 vol. crown 8vo. 5*s.*
— — Subjection of Women. Crown 8vo. 6*s.*
— — Utilitarianism. 8vo. 5*s.*
— — Three Essays on Religion, &c. 8vo. 5*s.*
Mulhall's History of Prices since 1850. Crown 8vo. 6*s.*
Müller's The Science of Thought. 8vo. 21*s.*
Sandars's Institutes of Justinian, with English Notes. 8vo. 18*s.*
Seebohm's English Village Community. 8vo. 16*s.*
Sully's Outlines of Psychology. 8vo. 12*s.* 6*d.*
— Teacher's Handbook of Psychology. Crown 8vo. 6*s.* 6*d.*
Swinburne's Picture Logic. Post 8vo. 5*s.*
Thompson's A System of Psychology. 2 vols. 8vo. 36*s.*
— The Problem of Evil. 8vo. 10*s.* 6*d.*
Thomson's Outline of Necessary Laws of Thought. Crown 8vo. 6*s.*
Twiss's Law of Nations in Time of War. 8vo. 21*s.*
— — in Time of Peace. 8vo. 15*s.*
Webb's The Veil of Isis. 8vo. 10*s.* 6*d.*
Whately's Elements of Logic. Crown 8vo. 4*s.* 6*d.*
— — — Rhetoric. Crown 8vo. 4*s.* 6*d.*
Wylie's Labour, Leisure, and Luxury. Crown 8vo. 6*s.*
Zeller's History of Eclecticism in Greek Philosophy. Crown 8vo. 16*s.* 6*d.*
— Plato and the Older Academy. Crown 8vo. 18*s.*
— Pre-Socratic Schools. 2 vols. crown 8vo. 30*s.*
— Socrates and the Socratic Schools. Crown 8vo. 10*s.* 6*d.*
— Stoics, Epicureans, and Sceptics. Crown 8vo. 15*s.*
— Outlines of the History of Greek Philosophy. Crown 8vo. 10*s.* 6*d.*

MISCELLANEOUS WORKS.

A. K. H. B., The Essays and Contributions of. Crown 8vo.
- Autumn Holidays of a Country Parson. 3s. 6d.
- Changed Aspects of Unchanged Truths. 3s. 6d.
- Common-Place Philosopher in Town and Country. 3s. 6d.
- Critical Essays of a Country Parson. 3s. 6d.
- Counsel and Comfort spoken from a City Pulpit. 3s. 6d.
- Graver Thoughts of a Country Parson. Three Series. 3s. 6d. each.
- Landscapes, Churches, and Moralities. 3s. 6d.
- Leisure Hours in Town. 3s. 6d. Lessons of Middle Age. 3s. 6d.
- Our Homely Comedy; and Tragedy. 3s. 6d.
- Our Little Life. Essays Consolatory and Domestic. Two Series. 3s. 6d. [each.
- Present-day Thoughts. 3s. 6d.
- Recreations of a Country Parson. Three Series. 3s. 6d. each.
- Seaside Musings on Sundays and Week-Days. 3s. 6d.
- Sunday Afternoons in the Parish Church of a University City. 3s. 6d.

Armstrong's (Ed. J.) Essays and Sketches. Fcp. 8vo. 5s.
Arnold's (Dr. Thomas) Miscellaneous Works. 8vo. 7s. 6d.
Bagehot's Literary Studies, edited by Hutton. 2 vols. 8vo. 28s.
Beaconsfield (Lord), The Wit and Wisdom of. Crown 8vo. 1s. boards; 1s. 6d. cl.
Evans's Bronze Implements of Great Britain. 8vo. 25s.
Farrar's Language and Languages. Crown 8vo. 6s.
Froude's Short Studies on Great Subjects. 4 vols. crown 8vo. 24s.
Lang's Letters to Dead Authors. Fcp. 8vo. 6s. 6d.
— Books and Bookmen. Crown 8vo. 6s. 6d.
Macaulay's Miscellaneous Writings. 2 vols. 8vo. 21s. 1 vol. crown 8vo. 4s. 6d.
— Miscellaneous Writings and Speeches. Crown 8vo. 6s.
— Miscellaneous Writings, Speeches, Lays of Ancient Rome, &c. Cabinet Edition. 4 vols. crown 8vo. 24s.
— Writings, Selections from. Crown 8vo. 6s.
Müller's (Max) Lectures on the Science of Language. 2 vols. crown 8vo. 16s.
— — Lectures on India. 8vo. 12s. 6d.
Proctor's Chance and Luck. Crown 8vo. 5s.
Smith (Sydney) The Wit and Wisdom of. Crown 8vo. 1s. boards; 1s. 6d. cloth.

ASTRONOMY.

Herschel's Outlines of Astronomy. Square crown 8vo. 12s.
Proctor's Larger Star Atlas. Folio, 15s. or Maps only, 12s. 6d.
— New Star Atlas. Crown 8vo. 5s.
— Light Science for Leisure Hours. 3 Series. Crown 8vo. 5s. each.
— The Moon. Crown 8vo. 6s.
— Other Worlds than Ours. Crown 8vo. 5s.
— The Sun. Crown 8vo. 14s.
— Studies of Venus-Transits. 8vo. 5s.
— Orbs Around Us. Crown 8vo. 5s.
— Universe of Stars. 8vo. 10s. 6d.
Webb's Celestial Objects for Common Telescopes. Crown 8vo. 9s.

THE 'KNOWLEDGE' LIBRARY.

Edited by RICHARD A. PROCTOR.

How to Play Whist. Crown 8vo. 5s.
Home Whist. 16mo. 1s.
The Borderland of Science. Cr. 8vo. 6s.
Nature Studies. Crown 8vo. 6s.
Leisure Readings. Crown 8vo. 6s.
The Stars in their Seasons. Imp. 8vo. 5s.
Myths and Marvels of Astronomy. Crown 8vo. 6s.
Pleasant Ways in Science. Cr. 8vo. 6s.
Star Primer. Crown 4to. 2s. 6d.
The Seasons Pictured. Demy 4to. 5s.
Strength and Happiness. Cr. 8vo. 5s.
Rough Ways made Smooth. Cr. 8vo. 6s.
The Expanse of Heaven. Cr. 8vo. 5s.
Our Place among Infinities. Cr. 8vo. 5s.

CLASSICAL LANGUAGES AND LITERATURE.

Æschylus, The Eumenides of. Text, with Metrical English Translation, by J. F. Davies. 8vo. 7*s.*

Aristophanes' The Acharnians, translated by R. Y. Tyrrell. Crown 8vo. 2*s.* 6*d.*

Aristotle's The Ethics, Text and Notes, by Sir Alex. Grant, Bart. 2 vols. 8vo. 32*s.*

— The Nicomachean Ethics, translated by Williams, crown 8vo. 7*s.* 6*d.*

— The Politics, Books I. III. IV. (VII.) with Translation, &c. by Bolland and Lang. Crown 8vo. 7*s.* 6*d.*

Becker's *Charicles* and *Gallus*, by Metcalfe. Post 8vo. 7*s.* 6*d.* each.

Cicero's Correspondence, Text and Notes, by R. Y. Tyrrell. Vols. 1 & 2, 8vo. 12*s.* each.

Homer's Iliad, Homometrically translated by Cayley. 8vo. 12*s.* 6*d.*

— — Greek Text, with Verse Translation, by W. C. Green. Vol. 1, Books I.–XII. Crown 8vo. 6*s.*

Mahaffy's Classical Greek Literature. Crown 8vo. Vol. 1, The Poets, 7*s.* 6*d.* Vol. 2, The Prose Writers, 7*s.* 6*d.*

Plato's Parmenides, with Notes, &c. by J. Maguire. 8vo. 7*s.* 6*d.*

Virgil's Works, Latin Text, with Commentary, by Kennedy. Crown 8vo. 10*s.* 6*d.*

— Æneid, translated into English Verse, by Conington. Crown 8vo. 9*s.*

— — — — — — by W. J. Thornhill. Cr. 8vo. 7*s.* 6*d.*

— Poems, — — — Prose, by Conington. Crown 8vo. 9*s.*

Witt's Myths of Hellas, translated by F. M. Younghusband. Crown 8vo. 3*s.* 6*d.*

— The Trojan War, — — Fcp. 8vo. 2*s.*

— The Wanderings of Ulysses, — Crown 8vo. 3*s.* 6*d.*

NATURAL HISTORY, BOTANY, & GARDENING.

Allen's Flowers and their Pedigrees. Crown 8vo. Woodcuts, 5*s.*

Decaisne and Le Maout's General System of Botany. Imperial 8vo. 31*s.* 6*d.*

Dixon's Rural Bird Life. Crown 8vo. Illustrations, 5*s.*

Hartwig's Aerial World, 8vo. 10*s.* 6*d.*

— Polar World, 8vo. 10*s.* 6*d.*

— Sea and its Living Wonders. 8vo. 10*s.* 6*d.*

— Subterranean World, 8vo. 10*s.* 6*d.*

— Tropical World, 8vo. 10*s.* 6*d.*

Lindley's Treasury of Botany. 2 vols. fcp. 8vo. 12*s.*

Loudon's Encyclopædia of Gardening. 8vo. 21*s.*

— — Plants. 8vo. 42*s.*

Rivers's Orchard House. Crown 8vo. 5*s.*

— Miniature Fruit Garden. Fcp. 8vo. 4*s.*

Stanley's Familiar History of British Birds. Crown 8vo. 6*s.*

Wood's Bible Animals. With 112 Vignettes. 8vo. 10*s.* 6*d.*

— Common British Insects. Crown 8vo. 3*s.* 6*d.*

— Homes Without Hands, 8vo. 10*s.* 6*d.*

— Insects Abroad, 8vo. 10*s.* 6*d.*

— Horse and Man. 8vo. 14*s.*

— Insects at Home. With 700 Illustrations. 8vo. 10*s.* 6*d.*

— Out of Doors. Crown 8vo. 5*s.*

— Petland Revisited. Crown 8vo. 7*s.* 6*d.*

— Strange Dwellings. Crown 8vo. 5*s.* Popular Edition, 4to. 6*d.*

PRIZE AND PRESENTATION BOOKS.

Jameson's Sacred and Legendary Art. 6 vols. square 8vo.
Legends of the Madonna. 1 vol. 21*s.*
— — — Monastic Orders 1 vol. 21*s.*
— — — Saints and Martyrs. 2 vols. 31*s.* 6*d.*
— — — Saviour. Completed by Lady Eastlake. 2 vols. 42*s.*

Macaulay's Lays of Ancient Rome, illustrated by Scharf. Fcp. 4to. 10*s.* 6*d.*

The same, with *Ivry* and the *Armada*, illustrated by Weguelin. Crown 8vo. 3*s.* 6*d.*

New Testament (The) illustrated with Woodcuts after Paintings by the Early Masters. 4to. 21*s.*

By Dr. G. Hartwig.

Sea Monsters and Sea Birds (from 'The Sea and its Living Wonders'). With 75 Illustrations. Crown 8vo. 2*s.* 6*d.* cloth extra, gilt edges.

Denizens of the Deep (from 'The Sea and its Living Wonders'). With 117 Illustrations. Crown 8vo. 2*s.* 6*d.* cloth extra, gilt edges.

Dwellers in the Arctic Regions (from 'The Sea and its Living Wonders'). With 29 Illustrations. Crown 8vo. 2*s.* 6*d.* cloth extra, gilt edges.

Winged Life in the Tropics (from 'The Tropical World'). With 55 Illustrations. Crown 8vo. 2*s.* 6*d.* cloth extra, gilt edges.

Volcanoes and Earthquakes (from 'The Subterranean World'). With 30 Illustrations. Crown 8vo. 2*s.* 6*d.* cloth extra, gilt edges.

Wild Animals of the Tropics (from 'The Tropical World'). With 66 Illustrations. Crown 8vo. 3*s.* 6*d.* cloth extra, gilt edges.

By the Rev. J. G. Wood.

The Branch Builders (from 'Homes without Hands'). With 28 Illustrations. Crown 8vo. 2*s.* 6*d.* cloth extra, gilt edges.

Wild Animals of the Bible (from 'Bible Animals'). With 29 Illustrations. Crown 8vo. 3*s.* 6*d.* cloth extra, gilt edges.

Domestic Animals of the Bible (from 'Bible Animals'). With 23 Illustrations. Crown 8vo. 3*s.* 6*d.* cloth extra, gilt edges.

Bird Life of the Bible (from 'Bible Animals'). With 32 Illustrations. Crown 8vo. 3*s.* 6*d.* cloth extra, gilt edges.

Wonderful Nests (from 'Homes without Hands'). With 30 Illustrations. Crown 8vo. 3*s.* 6*d.* cloth extra, gilt edges.

Homes Under the Ground (from 'Homes without Hands'). With 28 Illustrations. Crown 8vo. 3*s.* 6*d.* cloth extra, gilt edges.

CHEMISTRY ENGINEERING, & GENERAL SCIENCE.

Arnott's Elements of Physics or Natural Philosophy. Crown 8vo. 12*s.* 6*d.*

Barrett's English Glees and Part-Songs: their Historical Development. Crown 8vo. 7*s.* 6*d.*

Bourne's Catechism of the Steam Engine. Crown 8vo. 7*s.* 6*d.*
— Handbook of the Steam Engine. Fcp. 8vo. 9*s.*
— Recent Improvements in the Steam Engine. Fcp. 8vo. 6*s.*

Buckton's Our Dwellings, Healthy and Unhealthy. Crown 8vo. 3*s.* 6*d.*

Clerk's The Gas Engine. With Illustrations. Crown 8vo. 7*s.* 6*d.*

Crookes's Select Methods in Chemical Analysis. 8vo. 24*s.*

Culley's Handbook of Practical Telegraphy. 8vo. 16*s.*

Fairbairn's Useful Information for Engineers. 3 vols. crown 8vo. 31*s.* 6*d.*
— Mills and Millwork. 1 vol. 8vo. 25*s.*

Ganot's Elementary Treatise on Physics, by Atkinson. Large crown 8vo. 15*s.*
— Natural Philosophy, by Atkinson. Crown 8vo. 7*s.* 6*d.*

Grove's Correlation of Physical Forces. 8vo. 15*s.*

Haughton's Six Lectures on Physical Geography. 8vo. 15*s.*

Helmholtz on the Sensations of Tone. Royal 8vo. 28*s.*
Helmholtz's Lectures on Scientific Subjects. 2 vols. crown 8vo. 7*s.* 6*d.* each.
Hudson and Gosse's The Rotifera or 'Wheel Animalcules.' With 30 Coloured Plates. 6 parts. 4to. 10*s.* 6*d.* each. Complete, 2 vols. 4to. £3. 10*s.*
Hullah's Lectures on the History of Modern Music. 8vo. 8*s.* 6*d.*
— Transition Period of Musical History. 8vo. 10*s.* 6*d.*
Jackson's Aid to Engineering Solution. Royal 8vo. 21*s.*
Jago's Inorganic Chemistry, Theoretical and Practical. Fcp. 8vo. 2*s.*
Jeans' Railway Problems. 8vo. 12*s.* 6*d.*
Kolbe's Short Text-Book of Inorganic Chemistry. Crown 8vo. 7*s.* 6*d.*
Lloyd's Treatise on Magnetism. 8vo. 10*s.* 6*d.*
Macalister's Zoology and Morphology of Vertebrate Animals. 8vo. 10*s.* 6*d.*
Macfarren's Lectures on Harmony. 8vo. 12*s.*
Miller's Elements of Chemistry, Theoretical and Practical. 3 vols. 8vo. Part I. Chemical Physics, 16*s.* Part II. Inorganic Chemistry, 24*s.* Part III. Organic Chemistry, price 31*s.* 6*d.*
Mitchell's Manual of Practical Assaying. 8vo. 31*s.* 6*d.*
Noble's Hours with a Three-inch Telescope. Crown 8vo. 4*s.* 6*d.*
Northcott's Lathes and Turning. 8vo. 18*s.*
Owen's Comparative Anatomy and Physiology of the Vertebrate Animals. 3 vols. 8vo. 73*s.* 6*d.*
Piesse's Art of Perfumery. Square crown 8vo. 21*s.*
Richardson's The Health of Nations; Works and Life of Edwin Chadwick, C.B. 2 vols. 8vo. 28*s.*
— The Commonhealth; a Series of Essays. Crown 8vo. 6*s.*
Schellen's Spectrum Analysis. 8vo. 31*s.* 6*d.*
Sennett's Treatise on the Marine Steam Engine. 8vo. 21*s.*
Smith's Air and Rain. 8vo. 24*s.*
Stoney's The Theory of the Stresses on Girders, &c. Royal 8vo. 36*s.*
Tilden's Practical Chemistry. Fcp. 8vo. 1*s.* 6*d.*
Tyndall's Faraday as a Discoverer. Crown 8vo. 3*s.* 6*d.*
— Floating Matter of the Air. Crown 8vo. 7*s.* 6*d.*
— Fragments of Science. 2 vols. post 8vo. 16*s.*
— Heat a Mode of Motion. Crown 8vo. 12*s.*
— Lectures on Light delivered in America. Crown 8vo. 5*s.*
— Lessons on Electricity. Crown 8vo. 2*s.* 6*d.*
— Notes on Electrical Phenomena. Crown 8vo. 1*s.* sewed, 1*s.* 6*d.* cloth.
— Notes of Lectures on Light. Crown 8vo. 1*s.* sewed, 1*s.* 6*d.* cloth.
— Sound, with Frontispiece and 203 Woodcuts. Crown 8vo. 10*s.* 6*d.*
Watts's Dictionary of Chemistry. 9 vols. medium 8vo. £15. 2*s.* 6*d.*
Wilson's Manual of Health-Science. Crown 8vo. 2*s.* 6*d.*

THEOLOGICAL AND RELIGIOUS WORKS.

Arnold's (Rev. Dr. Thomas) Sermons. 6 vols. crown 8vo. 5*s.* each.
Boultbee's Commentary on the 39 Articles. Crown 8vo. 6*s.*
Browne's (Bishop) Exposition of the 39 Articles. 8vo. 16*s.*
Bullinger's Critical Lexicon and Concordance to the English and Greek New Testament. Royal 8vo. 15*s.*
Colenso on the Pentateuch and Book of Joshua. Crown 8vo. 6*s.*
Conder's Handbook of the Bible. Post 8vo. 7*s.* 6*d.*

Conybeare & Howson's Life and Letters of St. Paul :—
Library Edition, with Maps, Plates, and Woodcuts. 2 vols. square crown 8vo. 21*s.*
Student's Edition, revised and condensed, with 46 Illustrations and Maps. 1 vol. crown 8vo. 7*s.* 6*d.*
Cox's (Homersham) The First Century of Christianity. 8vo. 12*s.*
Davidson's Introduction to the Study of the New Testament. 2 vols. 8vo. 30*s.*
Edersheim's Life and Times of Jesus the Messiah. 2 vols. 8vo. 24*s.*
— Prophecy and History in relation to the Messiah. 8vo. 12*s.*
Elliott's (Bishop) Commentary on St. Paul's Epistles. 8vo. Corinthians I. 16*s.* Galatians, 8*s.* 6*d.* Ephesians, 8*s.* 6*d.* Pastoral Epistles, 10*s.* 6*d.* Philippians, Colossians and Philemon, 10*s.* 6*d.* Thessalonians, 7*s.* 6*d.*
— Lectures on the Life of our Lord. 8vo. 12*s.*
Ewald's Antiquities of Israel, translated by Solly. 8vo. 12*s.* 6*d.*
— History of Israel, translated by Carpenter & Smith. 8 vols. 8vo. Vols. 1 & 2, 24*s.* Vols. 3 & 4, 21*s.* Vol. 5, 18*s.* Vol. 6, 16*s.* Vol. 7, 21*s.* Vol. 8, 18*s.*
Hobart's Medical Language of St. Luke. 8vo. 16*s.*
Hopkins's Christ the Consoler. Fcp. 8vo. 2*s.* 6*d.*
Jukes's New Man and the Eternal Life. Crown 8vo. 6*s.*
— Second Death and the Restitution of all Things. Crown 8vo. 3*s.* 6*d.*
— Types of Genesis. Crown 8vo. 7*s.* 6*d.*
— The Mystery of the Kingdom. Crown 8vo. 3*s.* 6*d.*
Lenormant's New Translation of the Book of Genesis. Translated into English. 8vo. 10*s.* 6*d.*
Lyra Germanica : Hymns translated by Miss Winkworth. Fcp. 8vo. 5*s.*
Macdonald's (G.) Unspoken Sermons. Two Series, Crown 8vo. 3*s.* 6*d.* each.
— The Miracles of our Lord. Crown 8vo. 3*s.* 6*d.*
Manning's Temporal Mission of the Holy Ghost. Crown 8vo. 8*s.* 6*d.*
Martineau's Endeavours after the Christian Life. Crown 8vo. 7*s.* 6*d.*
— Hymns of Praise and Prayer. Crown 8vo. 4*s.* 6*d.* 32mo. 1*s.* 6*d.*
— Sermons, Hours of Thought on Sacred Things. 2 vols. 7*s.* 6*d.* each.
Monsell's Spiritual Songs for Sundays and Holidays. Fcp. 8vo. 5*s.* 18mo. 2*s.*
Müller's (Max) Origin and Growth of Religion. Crown 8vo. 7*s.* 6*d.*
— — Science of Religion. Crown 8vo. 7*s.* 6*d.*
Newman's Apologia pro Vitâ Suâ. Crown 8vo. 6*s.*
— The Idea of a University Defined and Illustrated. Crown 8vo. 7*s.*
— Historical Sketches. 3 vols. crown 8vo. 6*s.* each.
— Discussions and Arguments on Various Subjects. Crown 8vo. 6*s.*
— An Essay on the Development of Christian Doctrine. Crown 8vo. 6*s.*
— Certain Difficulties Felt by Anglicans in Catholic Teaching Considered. Vol. 1, crown 8vo. 7*s.* 6*d.* Vol. 2, crown 8vo. 5*s.* 6*d.*
— The Via Media of the Anglican Church, Illustrated in Lectures, &c. 2 vols. crown 8vo. 6*s.* each
— Essays, Critical and Historical. 2 vols. crown 8vo. 12*s.*
— Essays on Biblical and on Ecclesiastical Miracles. Crown 8vo. 6*s.*
— An Essay in Aid of a Grammar of Assent. 7*s.* 6*d.*
Overton's Life in the English Church (1660–1714). 8vo. 14*s.*
Supernatural Religion. Complete Edition. 3 vols. 8vo. 36*s.*
Younghusband's The Story of Our Lord told in Simple Language for Children. Illustrated. Crown 8vo. 2*s.* 6*d.* cloth plain ; 3*s.* 6*d.* cloth extra, gilt edges.

TRAVELS, ADVENTURES, &c.

Baker's Eight Years in Ceylon. Crown 8vo. 5*s.*

— Rifle and Hound in Ceylon. Crown 8vo. 5*s.*

Brassey's Sunshine and Storm in the East. Library Edition, 8vo. 21*s.* Cabinet Edition, crown 8vo. 7*s.* 6*d.* Popular Edition, 4to. 6*d.*

— Voyage in the 'Sunbeam.' Library Edition, 8vo. 21*s.* Cabinet Edition, crown 8vo. 7*s.* 6*d.* School Edition, fcp. 8vo. 2*s.* Popular Edition, 4to. 6*d.*

— In the Trades, the Tropics, and the 'Roaring Forties.' Library Edition, 8vo. 21*s.* Cabinet Edition, crown 8vo. 17*s.* 6*d.* Popular Edition, 4to. 6*d.*

Froude's Oceana; or, England and her Colonies. Crown 8vo. 2*s.* boards; 2*s.* 6*d.* cloth.

Howitt's Visits to Remarkable Places. Crown 8vo. 7*s.* 6*d.*

Riley's Athos; or, The Mountain of the Monks. 8vo. 21*s.*

Three in Norway. By Two of Them. Illustrated. Crown 8vo. 2*s.* boards; 2*s.* 6*d.* cloth.

WORKS OF FICTION.

Beaconsfield's (The Earl of) Novels and Tales. Hughenden Edition, with 2 Portraits on Steel and 11 Vignettes on Wood. 11 vols. crown 8vo. £2. 2*s.* Cheap Edition, 11 vols. crown 8vo. 1*s.* each, boards; 1*s.* 6*d.* each, cloth.

Lothair.	Contarini Fleming.
Sybil.	Alroy, Ixion, &c.
Coningsby.	The Young Duke, &c.
Tancred.	Vivian Grey.
Venetia.	Endymion.
Henrietta Temple.	

Brabourne's (Lord) Friends and Foes from Fairyland. Crown 8vo. 6*s.*

Caddy's (Mrs.) Through the Fields with Linnæus: a Chapter in Swedish History. 2 vols. crown 8vo. 16*s.*

Gilkes' Boys and Masters. Crown 8vo. 3*s.* 6*d.*

Haggard's (H. Rider) She: a History of Adventure. Crown 8vo. 6*s.*

— — Allan Quatermain. Illustrated. Crown 8vo. 6*s.*

Harte (Bret) On the Frontier. Three Stories. 16mo. 1*s.*

— — By Shore and Sedge. Three Stories. 16mo. 1*s.*

— — In the Carquinez Woods. Crown 8vo. 1*s.* boards; 1*s.* 6*d.* cloth.

Lyall's (Edna) The Autobiography of a Slander. Fcp. 1*s.* sewed.

Melville's (Whyte) Novels. 8 vols. fcp. 8vo. 1*s.* each, boards; 1*s.* 6*d.* each, cloth.

Digby Grand.	Good for Nothing.
General Bounce.	Holmby House.
Kate Coventry.	The Interpreter.
The Gladiators.	The Queen's Maries.

Molesworth's (Mrs.) Marrying and Giving in Marriage. Crown 8vo. 2*s.* 6*d.*

Novels by the Author of 'The Atelier du Lys':

The Atelier du Lys; or, An Art Student in the Reign of Terror. Crown 8vo. 2*s.* 6*d.*

Mademoiselle Mori: a Tale of Modern Rome. Crown 8vo. 2*s.* 6*d.*

In the Olden Time: a Tale of the Peasant War in Germany. Crown 8vo. 2*s.* 6*d.*

Hester's Venture. Crown 8vo. 2*s.* 6*d.*

Oliphant's (Mrs.) Madam. Crown 8vo. 1*s.* boards; 1*s.* 6*d.* cloth.

— — In Trust: the Story of a Lady and her Lover. Crown 8vo. 1*s.* boards; 1*s.* 6*d.* cloth.

Payn's (James) The Luck of the Darrells. Crown 8vo. 1*s.* boards; 1*s.* 6*d.* cloth.
— — Thicker than Water. Crown 8vo. 1*s.* boards; 1*s.* 6*d.* cloth.
Reader's Fairy Prince Follow-my-Lead. Crown 8vo. 2*s.* 6*d.*
— The Ghost of Brankinshaw; and other Tales. Fcp. 8vo. 2*s.* 6*d.*
Sewell's (Miss) Stories and Tales. Crown 8vo. 1*s.* each, boards; 1*s.* 6*d.* cloth; 2*s.* 6*d.* cloth extra, gilt edges.

Amy Herbert.	A Glimpse of the World.
Cleve Hall.	Katharine Ashton.
The Earl's Daughter.	Laneton Parsonage.
Experience of Life.	Margaret Percival.
Gertrude.	Ursula.
Ivors.	

Stevenson's (R. L.) The Dynamiter. Fcp. 8vo. 1*s.* sewed; 1*s.* 6*d.* cloth.
— — Strange Case of Dr. Jekyll and Mr. Hyde. Fcp. 8vo. 1*s.* sewed; 1*s.* 6*d.* cloth.
Sturgis' Thraldom: a Story. Crown 8vo. 6*s.*
Trollope's (Anthony) Novels. Fcp. 8vo. 1*s.* each, boards; 1*s.* 6*d.* cloth.

The Warden	Barchester Towers.

POETRY AND THE DRAMA.

Armstrong's (Ed. J.) Poetical Works. Fcp. 8vo. 5*s.*
— (G. F.) Poetical Works:—

Poems, Lyrical and Dramatic. Fcp. 8vo. 6*s.*	King Saul. Fcp. 8vo. 5*s.*
Ugone: a Tragedy. Fcp. 8vo. 6*s.*	King David. Fcp. 8vo. 6*s.*
A Garland from Greece. Fcp. 8vo. 9*s.*	King Solomon. Fcp. 8vo. 6*s.*
	Stories of Wicklow. Fcp. 8vo. 9*s.*

Bowen's Harrow Songs and other Verses. Fcp. 8vo. 2*s.* 6*d.*; or printed on hand-made paper, 5*s.*
Bowdler's Family Shakespeare. Medium 8vo. 14*s.* 6 vols. fcp. 8vo. 21*s.*
Dante's Divine Comedy, translated by James Innes Minchin. Crown 8vo. 15*s.*
Goethe's Faust, translated by Birds. Large crown 8vo. 12*s.* 6*d.*
— — translated by Webb. 8vo. 12*s.* 6*d.*
— — edited by Selss. Crown 8vo. 5*s.*
Ingelow's Poems. Vols. 1 and 2, fcp. 8vo. 12*s.*
— Lyrical and other Poems. Fcp. 8vo. 2*s.* 6*d.* cloth, plain; 3*s.* cloth, gilt edges.
Macaulay's Lays of Ancient Rome, with Ivry and the Armada. Illustrated by Weguelin. Crown 8vo. 3*s.* 6*d.* gilt edges.
The same, Popular Edition. Illustrated by Scharf. Fcp. 4to. 6*d.* swd., 1*s.* cloth.
Nesbit's Lays and Legends. Crown 8vo. 5*s.*
Reader's Voices from Flowerland, a Birthday Book, 2*s.* 6*d.* cloth, 3*s.* 6*d.* roan.
Southey's Poetical Works. Medium 8vo. 14*s.*
Stevenson's A Child's Garden of Verses. Fcp. 8vo. 5*s.*
Virgil's Æneid, translated by Conington. Crown 8vo. 9*s.*
— Poems, translated into English Prose. Crown 8vo. 9*s.*

AGRICULTURE, HORSES, DOGS AND CATTLE.

Fitzwygram's Horses and Stables. 8vo. 5*s.*
Lloyd's The Science of Agriculture. 8vo. 12*s.*
Loudon's Encyclopædia of Agriculture. 21*s.*
Steel's Diseases of the Ox, a Manual of Bovine Pathology. 8vo. 15*s.*

Stonehenge's Dog in Health and Disease. Square crown 8vo. 7s. 6d.
— Greyhound. Square crown 8vo. 15s.
Taylor's Agricultural Note Book. Fcp. 8vo. 2s. 6d.
Ville on Artificial Manures, by Crookes. 8vo. 21s.
Youatt's Work on the Dog. 8vo. 6s.
— — — — Horse. 8vo. 7s. 6d.

SPORTS AND PASTIMES.

The Badminton Library of Sports and Pastimes. Edited by the Duke of Beaufort and A. E. T. Watson. With numerous Illustrations. Cr. 8vo. 10s. 6d. each.
Hunting, by the Duke of Beaufort, &c.
Fishing, by H. Cholmondeley-Pennell, &c. 2 vols.
Racing, by the Earl of Suffolk, &c.
Shooting, by Lord Walsingham, &c. 2 vols.
Cycling. By Viscount Bury.
*** *Other Volumes in preparation.*
Campbell-Walker's Correct Card, or How to Play at Whist. Fcp. 8vo. 2s. 6d.
Ford's Theory and Practice of Archery, revised by W. Butt. 8vo. 14s.
Francis's Treatise on Fishing in all its Branches. Post 8vo. 15s.
Longman's Chess Openings. Fcp. 8vo. 2s. 6d.
Pease's The Cleveland Hounds as a Trencher-Fed Pack. Royal 8vo. 12s.
Pole's Theory of the Modern Scientific Game of Whist. Fcp. 8vo. 2s. 6d.
Proctor's How to Play Whist. Crown 8vo. 5s.
Ronalds's Fly-Fisher's Entomology. 8vo. 14s.
Verney's Chess Eccentricities. Crown 8vo. 10s. 6d.
Wilcocks's Sea-Fisherman. Post 8vo. 6s.

ENCYCLOPÆDIAS, DICTIONARIES, AND BOOKS OF REFERENCE.

Acton's Modern Cookery for Private Families. Fcp. 8vo. 4s. 6d.
Ayre's Treasury of Bible Knowledge. Fcp. 8vo. 6s.
Brande's Dictionary of Science, Literature, and Art. 3 vols. medium 8vo. 63s.
Cabinet Lawyer (The), a Popular Digest of the Laws of England. Fcp. 8vo. 9s.
Oates's Dictionary of General Biography. Medium 8vo. 28s.
Gwilt's Encyclopædia of Architecture. 8vo. 52s. 6d.
Keith Johnston's Dictionary of Geography, or General Gazetteer. 8vo. 42s.
M'Culloch's Dictionary of Commerce and Commercial Navigation. 8vo. 63s.
Maunder's Biographical Treasury. Fcp. 8vo. 6s.
— Historical Treasury. Fcp. 8vo. 6s.
— Scientific and Literary Treasury. Fcp. 8vo. 6s.
— Treasury of Bible Knowledge, edited by Ayre. Fcp. 8vo. 6s.
— Treasury of Botany, edited by Lindley & Moore. Two Parts, 12s.
— Treasury of Geography. Fcp. 8vo. 6s.
— Treasury of Knowledge and Library of Reference. Fcp. 8vo. 6s.
— Treasury of Natural History. Fcp. 8vo. 6s.
Quain's Dictionary of Medicine. Medium 8vo. 31s. 6d., or in 2 vols. 34s.
Reeve's Cookery and Housekeeping. Crown 8vo. 7s. 6d.
Rich's Dictionary of Roman and Greek Antiquities. Crown 8vo. 7s. 6d.
Roget's Thesaurus of English Words and Phrases. Crown 8vo. 10s. 6d.
Willich's Popular Tables, by Marriott. Crown 8vo. 10s. 6d.

A SELECTION
OF
EDUCATIONAL WORKS.

TEXT-BOOKS OF SCIENCE
FULLY ILLUSTRATED.

Abney's Treatise on Photography. Fcp. 8vo. 3s. 6d.
Anderson's Strength of Materials. 3s. 6d.
Armstrong's Organic Chemistry. 3s. 6d.
Ball's Elements of Astronomy. 6s.
Barry's Railway Appliances. 3s. 6d.
Bauerman's Systematic Mineralogy. 6s.
— Descriptive Mineralogy. 6s.
Bloxam and Huntington's Metals. 5s.
Glazebrook's Physical Optics. 6s.
Glazebrook and Shaw's Practical Physics. 6s.
Gore's Art of Electro-Metallurgy. 6s.
Griffin's Algebra and Trigonometry. 3s. 6d. Notes and Solutions, 3s. 6d.
Holmes's The Steam Engine. 6s.
Jenkin's Electricity and Magnetism. 3s. 6d.
Maxwell's Theory of Heat. 3s. 6d.
Merrifield's Technical Arithmetic and Mensuration. 3s. 6d. Key, 3s. 6d.
Miller's Inorganic Chemistry. 3s. 6d.
Preece and Sivewright's Telegraphy. 5s.
Rutley's Study of Rocks, a Text-Book of Petrology. 4s. 6d.
Shelley's Workshop Appliances. 4s. 6d.
Thomé's Structural and Physiological Botany. 6s.
Thorpe's Quantitative Chemical Analysis. 4s. 6d.
Thorpe and Muir's Qualitative Analysis. 3s. 6d.
Tilden's Chemical Philosophy. 3s. 6d. With Answers to Problems. 4s. 6d.
Unwin's Elements of Machine Design. 6s.
Watson's Plane and Solid Geometry. 3s. 6d.

THE GREEK LANGUAGE.

Bloomfield's College and School Greek Testament. Fcp. 8vo. 5s.
Bolland & Lang's Politics of Aristotle. Post 8vo. 7s. 6d.
Collis's Chief Tenses of the Greek Irregular Verbs. 8vo. 1s.
— Pontes Græci, Stepping-Stone to Greek Grammar. 12mo. 3s. 6d.
— Praxis Græca, Etymology. 12mo. 2s. 6d.
— Greek Verse-Book, Praxis Iambica. 12mo. 4s. 6d.
Farrar's Brief Greek Syntax and Accidence. 12mo. 4s. 6d.
— Greek Grammar Rules for Harrow School. 12mo. 1s. 6d.
Geare's Notes on Thucydides. Book I. Fcp. 8vo. 2s. 6d.
Hewitt's Greek Examination-Papers. 12mo. 1s. 6d.
Isbister's Xenophon's Anabasis, Books I. to III. with Notes. 12mo. 3s. 6d.
Jerram's Græcè Reddenda. Crown 8vo. 1s. 6d.

LONGMANS, GREEN, & CO., London and New York.

Kennedy's Greek Grammar. 12mo. 4*s.* 6*d.*
Liddell & Scott's English-Greek Lexicon. 4to. 36*s.*; Square 12mo. 7*s.* 6*d.*
Mahaffy's Classical Greek Literature. Crown 8vo. Poets, 7*s.* 6*d.* Prose Writers, 7*s.* 6*d.*
Morris's Greek Lessons. Square 18mo. Part I. 2*s.* 6*d.*; Part II. 1*s.*
Parry's Elementary Greek Grammar. 12mo. 3*s.* 6*d.*
Plato's Republic, Book I. Greek Text, English Notes by Hardy. Crown 8vo. 3*s.*
Sheppard and Evans's Notes on Thucydides. Crown 8vo. 7*s.* 6*d.*
Thucydides, Book IV. with Notes by Barton and Chavasse. Crown 8vo. 5*s.*
Valpy's Greek Delectus, improved by White. 12mo. 2*s.* 6*d.* Key, 2*s.* 6*d.*
White's Xenophon's Expedition of Cyrus, with English Notes. 12mo. 7*s.* 6*d.*
Wilkins's Manual of Greek Prose Composition. Crown 8vo. 5*s.* Key, 5*s.*
— Exercises in Greek Prose Composition. Crown 8vo. 4*s.* 6*d.* Key, 2*s.* 6*d.*
— New Greek Delectus. Crown 8vo. 3*s.* 6*d.* Key, 2*s.* 6*d.*
— Progressive Greek Delectus. 12mo. 4*s.* Key, 2*s.* 6*d.*
— Progressive Greek Anthology. 12mo. 5*s.*
— Scriptores Attici, Excerpts with English Notes. Crown 8vo. 7*s.* 6*d.*
— Speeches from Thucydides translated. Post 8vo. 6*s.*
Yonge's English-Greek Lexicon. 4to. 21*s.*; Square 12mo. 8*s.* 6*d.*

THE LATIN LANGUAGE.

Bradley's Latin Prose Exercises. 12mo. 3*s.* 6*d.* Key, 5*s.*
— Continuous Lessons in Latin Prose. 12mo. 5*s.* Key, 5*s.* 6*d.*
— Cornelius Nepos, improved by White. 12mo. 3*s.* 6*d.*
— Eutropius, improved by White. 12mo. 2*s.* 6*d.*
— Ovid's Metamorphoses, improved by White. 12mo. 4*s.* 6*d.*
— Select Fables of Phædrus, improved by White. 12mo. 2*s.* 6*d.*
Collis's Chief Tenses of Latin Irregular Verbs. 8vo. 1*s.*
— Pontes Latini, Stepping-Stone to Latin Grammar. 12mo. 3*s.* 6*d.*
Hewitt's Latin Examination-Papers. 12mo. 1*s.* 6*d.*
Isbister's Cæsar, Books I.-VII. 12mo. 4*s.*; or with Reading Lessons, 4*s.* 6*d.*
— Cæsar's Commentaries, Books I.-V. 12mo. 3*s.* 6*d.*
— First Book of Cæsar's Gallic War. 12mo. 1*s.* 6*d.*
Jerram's Latiné Reddenda. Crown 8vo. 1*s.* 6*d.*
Kennedy's Child's Latin Primer, or First Latin Lessons. 12mo. 2*s.*
— Child's Latin Accidence. 12mo. 1*s.*
— Elementary Latin Grammar. 12mo. 3*s.* 6*d.*
— Elementary Latin Reading Book, or Tirocinium Latinum. 12mo. 2*s.*
— Latin Prose, Palæstra Stili Latini. 12mo. 6*s.*
— Latin Vocabulary. 12mo. 2*s.* 6*d.*
— Subsidia Primaria, Exercise Books to the Public School Latin Primer. I. Accidence and Simple Construction, 2*s.* 6*d.* II. Syntax, 3*s.* 6*d.*
— Key to the Exercises in Subsidia Primaria, Parts I. and II. price 5*s.*
— Subsidia Primaria, III. the Latin Compound Sentence. 12mo. 1*s.*
— Curriculum Stili Latini. 12mo. 4*s.* 6*d.* Key, 7*s.* 6*d.*
— Palæstra Latina, or Second Latin Reading Book. 12mo. 5*s.*

Millington's Latin Prose Composition. Crown 8vo. 3*s.* 6*d.*
— Selections from Latin Prose. Crown 8vo. 2*s.* 6*d.*
Moody's Eton Latin Grammar. 12mo. 2*s.* 6*d.* The Accidence separately, 1*s.*
Morris's Elementa Latina. Fcp. 8vo. 1*s.* 6*d.* Key, 2*s.* 6*d.*
Parry's Origines Romanæ, from Livy, with English Notes. Crown 8vo. 4*s.*
The Public School Latin Primer. 12mo. 2*s.* 6*d.*
— — — — Grammar, by Rev. Dr. Kennedy. Post 8vo. 7*s.* 6*d.*
Prendergast's Mastery Series, Manual of Latin. 12mo. 2*s.* 6*d.*
Rapier's Introduction to Composition of Latin Verse. 12mo. 3*s.* 6*d.* Key, 2*s.* 6*d.*
Sheppard and Turner's Aids to Classical Study. 12mo. 5*s.* Key, 6*s.*
Valpy's Latin Delectus, improved by White. 12mo. 2*s.* 6*d.* Key, 3*s.* 6*d.*
Virgil's Æneid, translated into English Verse by Conington. Crown 8vo. 9*s.*
— Works, edited by Kennedy. Crown 8vo. 10*s.* 6*d.*
— — translated into English Prose by Conington. Crown 8vo. 9*s.*
Walford's Progressive Exercises in Latin Elegiac Verse. 12mo. 2*s.* 6*d.* Key, 5*s.*
White and Riddle's Large Latin-English Dictionary. 1 vol. 4to. 21*s.*
White's Concise Latin-Eng. Dictionary for University Students. Royal 8vo. 12*s.*
— Junior Students' Eng.-Lat. & Lat.-Eng. Dictionary. Square 12mo. 5*s.*
Separately { The Latin-English Dictionary, price 3*s.*
The English-Latin Dictionary, price 3*s.* }
Yonge's Latin Gradus. Post 8vo. 9*s.*; or with Appendix, 12*s.*

WHITE'S GRAMMAR-SCHOOL GREEK TEXTS.

Æsop (Fables) & Palæphatus (Myths). 32mo. 1*s.*
Euripides, Hecuba. 2*s.*
Homer, Iliad, Book I. 1*s.*
— Odyssey, Book I. 1*s.*
Lucian, Select Dialogues. 1*s.*
Xenophon, Anabasis, Books I. III. IV. V. & VI. 1*s.* 6*d.* each; Book II. 1*s.*; Book VII. 2*s.*
Xenophon, Book I. without Vocabulary. 3*d.*
St. Matthew's and St. Luke's Gospels. 2*s.* 6*d.* each.
St. Mark's and St. John's Gospels. 1*s.* 6*d.* each.
The Acts of the Apostles. 2*s.* 6*d.*
St. Paul's Epistle to the Romans. 1*s.* 6*d.*

The Four Gospels in Greek, with Greek-English Lexicon. Edited by John T. White, D.D. Oxon. Square 32mo. price 5*s.*

WHITE'S GRAMMAR-SCHOOL LATIN TEXTS.

Cæsar, Gallic War, Books I. & II. V. & VI. 1*s.* each. Book I. without Vocabulary, 3*d.*
Cæsar, Gallic War, Books III. & IV. 9*d.* each.
Cæsar, Gallic War, Book VII. 1*s.* 6*d.*
Cicero, Cato Major (Old Age). 1*s.* 6*d.*
Cicero, Lælius (Friendship). 1*s.* 6*d.*
Eutropius, Roman History, Books I. & II. 1*s.* Books III. & IV. 1*s.*
Horace, Odes, Books I. II. & IV. 1*s.* each.
Horace, Odes, Book III. 1*s.* 6*d.*
Horace, Epodes and Carmen Seculare. 1*s.*
Nepos, Miltiades, Simon, Pausanias, Aristides. 9*d.*
Ovid. Selections from Epistles and Fasti. 1*s.*
Ovid, Select Myths from Metamorphoses. 9*d.*
Phædrus, Select Easy Fables.
Phædrus, Fables, Books I. & II. 1*s.*
Sallust, Bellum Catilinarium. 1*s.* 6*d.*
Virgil, Georgics, Book IV. 1*s.*
Virgil, Æneid, Books I. to VI. 1*s.* each. Book I. without Vocabulary, 3*d.*
Virgil, Æneid, Books VII. VIII. X. XI. XII. 1*s.* 6*d.* each.

THE FRENCH LANGUAGE.

Albités's How to Speak French. Fcp. 8vo. 5s. 6d.
— Instantaneous French Exercises. Fcp. 2s. Key, 2s.
Cassal's French Genders. Crown 8vo. 3s. 6d.
Cassal & Karcher's Graduated French Translation Book. Part I. 3s. 6d. Part II. 5s. Key to Part I. by Professor Cassal, price 5s.
Contanseau's Practical French and English Dictionary. Post 8vo. 3s. 6d.
— Pocket French and English Dictionary. Square 18mo. 1s. 6d.
— Premières Lectures. 12mo. 2s. 6d.
— First Step in French. 12mo. 2s. 6d. Key, 3s.
— French Accidence. 12mo. 2s. 6d.
— — Grammar. 12mo. 4s. Key, 8s.
Contanseau's Middle-Class French Course. Fcp. 8vo.:—
Accidence, 8d.
Syntax, 8d.
French Conversation-Book, 8d.
First French Exercise-Book, 8d.
Second French Exercise-Book, 8d.
French Translation-Book, 8d.
Easy French Delectus, 8d.
First French Reader, 8d.
Second French Reader, 8d.
French and English Dialogues, 8d.
Contanseau's Guide to French Translation. 12mo. 3s. 6d. Key 3s. 6d.
— Prosateurs et Poètes Français. 12mo. 5s.
— Précis de la Littérature Française. 12mo. 3s. 6d.
— Abrégé de l'Histoire de France. 12mo. 2s. 6d.
Féval's Chouans et Bleus, with Notes by C. Sankey, M.A. Fcp. 8vo. 2s. 6d.
Jerram's Sentences for Translation into French. Cr. 8vo. 1s. Key, 2s. 6d.
Prendergast's Mastery Series, French. 12mo. 2s. 6d.
Souvestre's Philosophe sous les Toits, by Stièvenard. Square 18mo. 1s. 6d.
Stepping-Stone to French Pronunciation. 18mo. 1s.
Stièvenard's Lectures Françaises from Modern Authors. 12mo. 4s. 6d.
— Rules and Exercises on the French Language. 12mo. 3s. 6d.
Tarver's Eton French Grammar. 12mo. 6s. 6d.

THE GERMAN LANGUAGE.

Blackley's Practical German and English Dictionary. Post 8vo. 3s. 6d.
Buchheim's German Poetry, for Repetition. 18mo. 1s. 6d.
Collis's Card of German Irregular Verbs. 8vo. 2s.
Fischer-Fischart's Elementary German Grammar. Fcp. 8vo. 2s. 6d.
Just's German Grammar. 12mo. 1s. 6d.
— German Reading Book. 12mo. 3s. 6d.
Longman's Pocket German and English Dictionary. Square 18mo. 2s. 6d.
Naftel's Elementary German Course for Public Schools. Fcp. 8vo.
German Accidence. 9d.
German Syntax. 9d.
First German Exercise-Book. 9d.
Second German Exercise-Book. 9d.
German Prose Composition Book. 9d.
First German Reader. 9d.
Second German Reader. 9d.
Prendergast's Mastery Series, German. 12mo. 2s. 6d.
Quick's Essentials of German. Crown 8vo. 3s. 6d.
Selss's School Edition of Goethe's Faust. Crown 8vo. 5s.
— Outline of German Literature. Crown 8vo. 4s. 6d.
Wirth's German Chit-Chat. Crown 8vo. 2s. 6d.

LONGMANS, GREEN, & CO., London and New York.

Spottiswoode & Co. Printers, New-street Square, London.

3 2044 050 750 5

MAR 4 1891
NOV 23 1891
FEB 25 1892
MAR 24 1892
MAY 13 1893
NOV 1 1893
NOV 11 1893
JAN 27 1894
MAY 2 1894
MAY 2 1894
FEB 2 1895
MAY 31 1895
JAN 18 1896
MAR 25 1896
JAN 1 1897
MAR 23 1900
MAY 16 1901
MAY 23 1904
NOV 26 1906
FEB 26 1909
SEP 27 1924
OCT 24 1925

3 2044 050 750 512